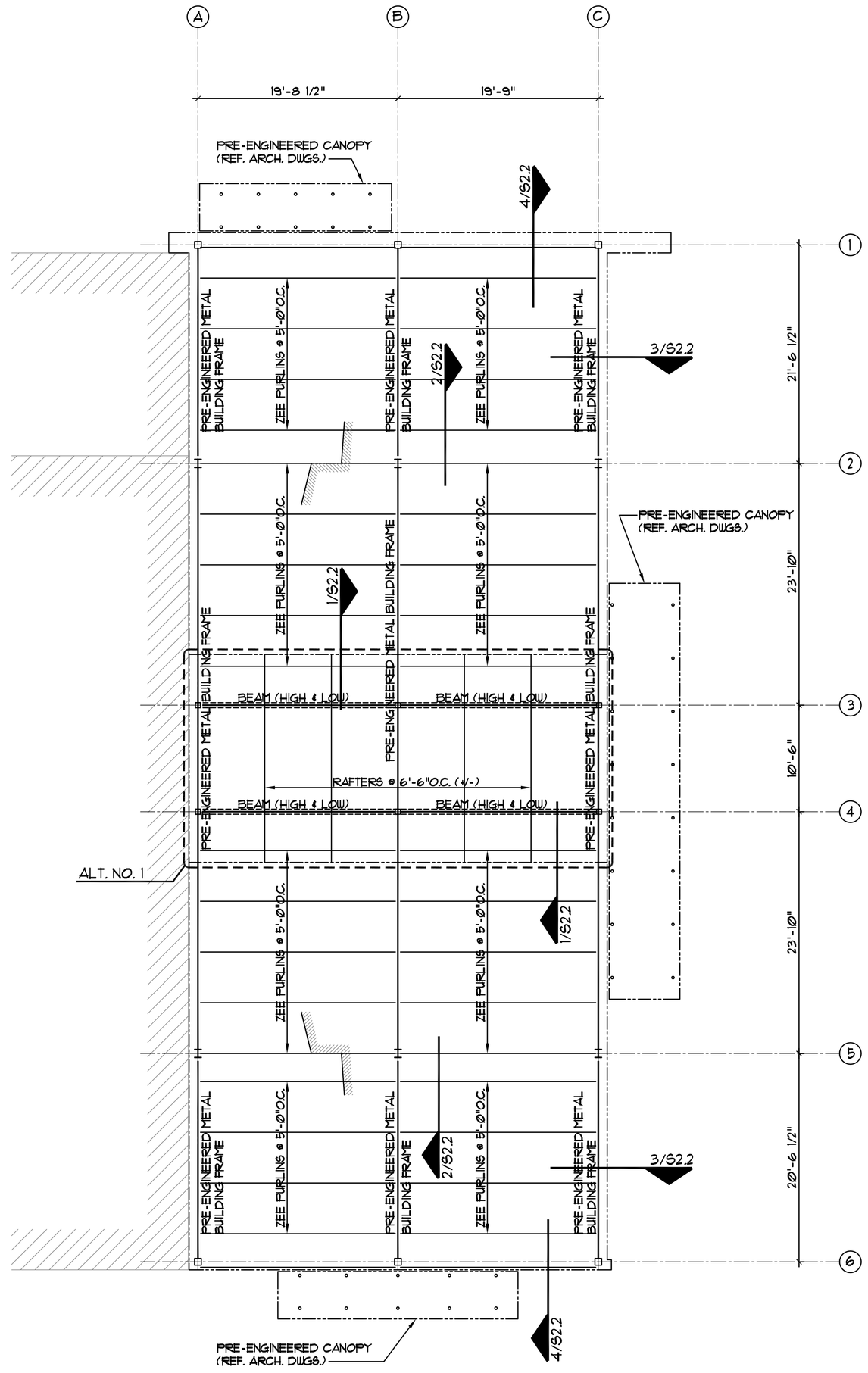

ROOF FRAMING PLAN
SCALE : 1/8" = 1'-0"

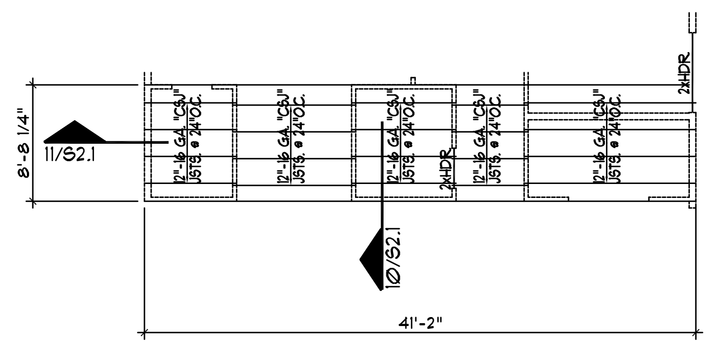

LOFT FRAMING PLAN
SCALE : 1/8" = 1'-0"

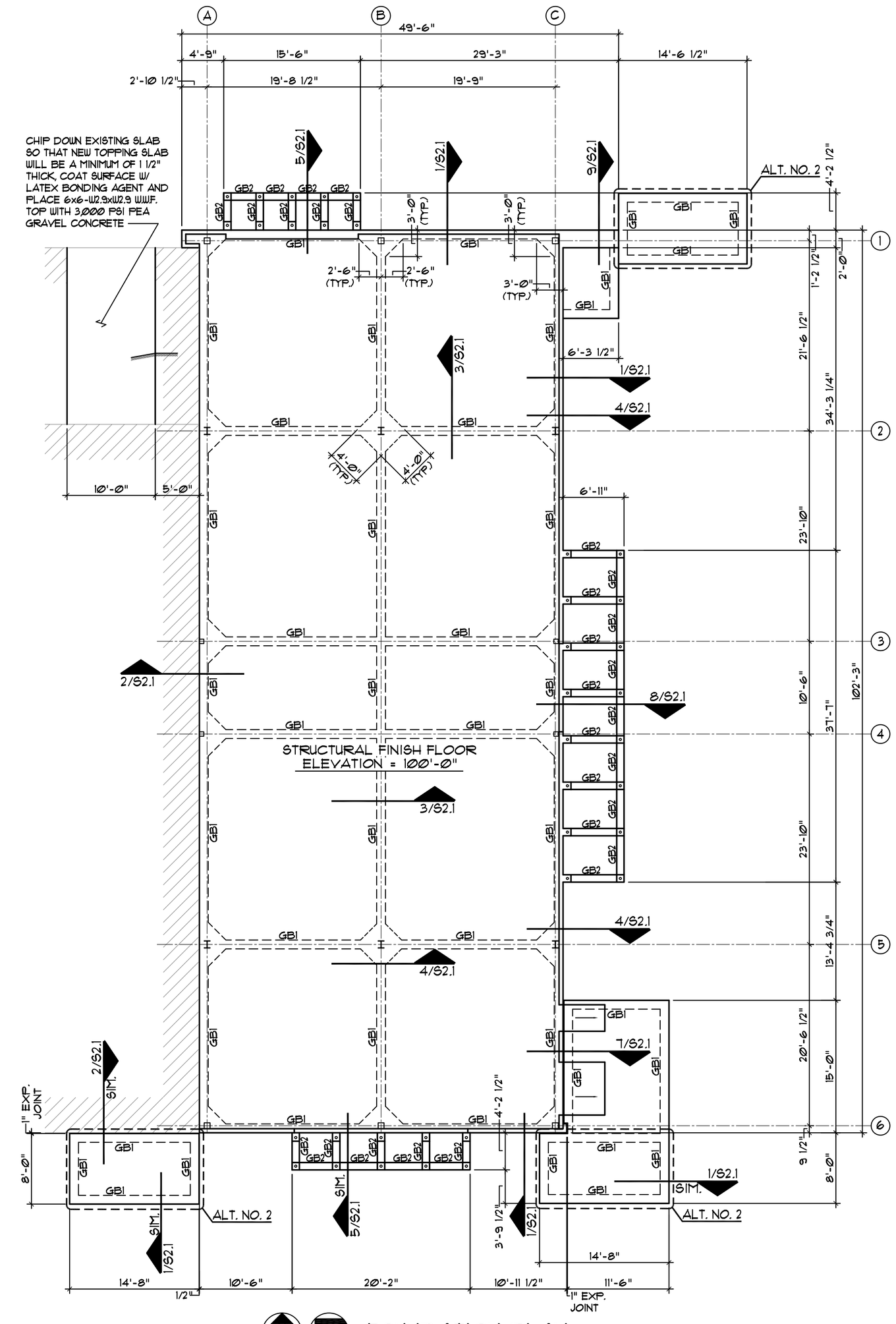

FOUNDATION PLAN
SCALE : 1/8" = 1'-0"

RICHARD MOGAS
ARCHITECTURE AIA
317 LEXINGTON AVENUE SUITE 4 SAN ANTONIO, TEXAS 78215
T 210.226.2220 F 210.226.1846 WWW.RICHARDMOGAS.COM
MOGAS@JUNO.COM COMMERCIAL - RESIDENTIAL - REMODEL

LEON VALLEY LIBRARY ADDITION
6425 Evers, Leon Valley, Texas 78238

SHEET TITLE
FOUNDATION/ROOF FRAMING PLANS

AccuTech Consultants, LLC
STRUCTURAL & FORENSIC ENGINEERING
909 NORTHEAST LOOP 410, SUITE 900
SAN ANTONIO, TEXAS 78209
TEL. (210) 930-5355
FAX (210) 930-5460

STATE OF TEXAS
ENRIQUE MARTINEZ
68166
REGISTERED
PROFESSIONAL ENGINEER
6/22/12
FIRM REG. #F-000007

SHEET:
S1.1
OF 4
Date: JUNE 22, 2012

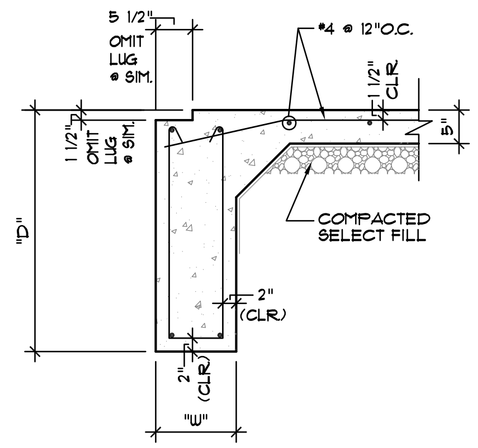

1 TYPICAL EXTERIOR BEAM

SCALE : 3/4" = 1'-0" TEB

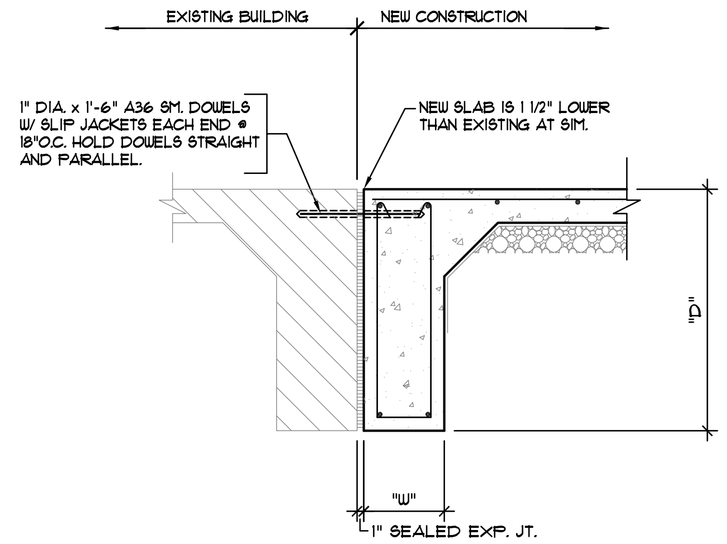

2 TYP. EXPANSION JT. @ BEAM

SCALE : 3/4" = 1'-0" TEJ2

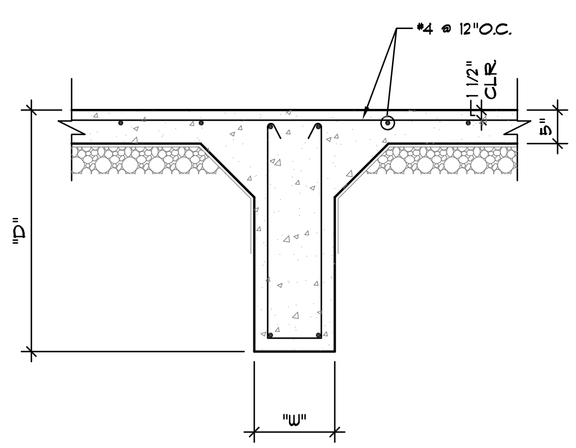

3 TYPICAL INTERIOR BEAM

SCALE : 3/4" = 1'-0" TIB

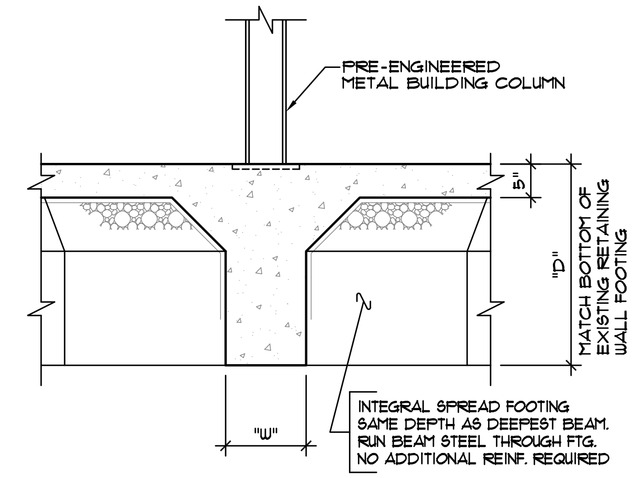

4 SECTION

SCALE : 3/4" = 1'-0" TSF2

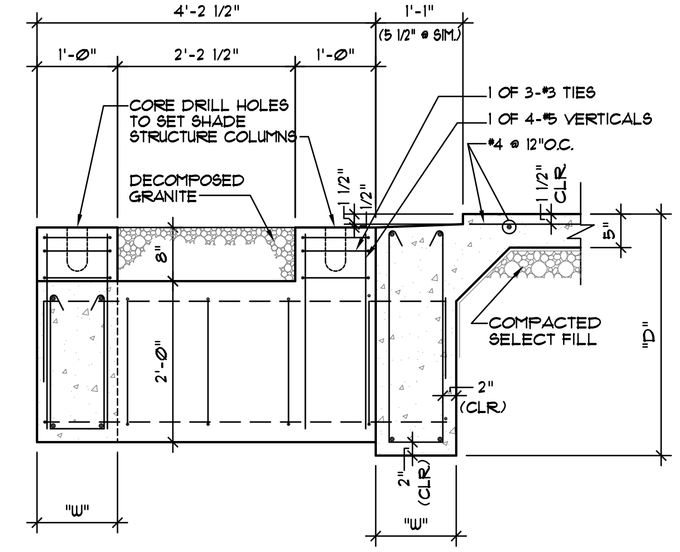

5 SECTION

SCALE : 3/4" = 1'-0" SECT-A

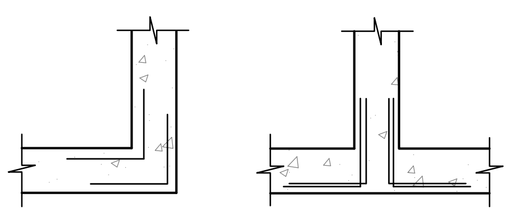

CORNERS " T " INTERSECTIONS

PROVIDE 4-#7 x 7'-0" CORNER BARS (2-TOP & 2-BOT.) AS SHOWN IN DETAILS ABOVE.

6 TYPICAL CORNER BARS

SCALE : N.T.S. TCB

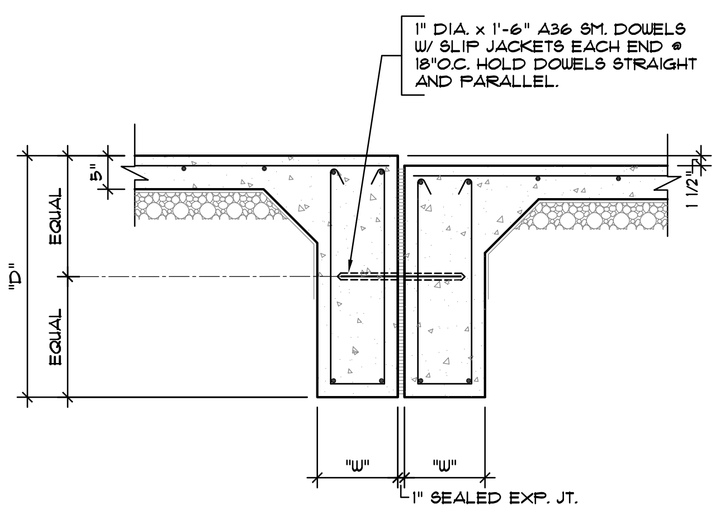

7 SECTION

SCALE : 3/4" = 1'-0" TEJ

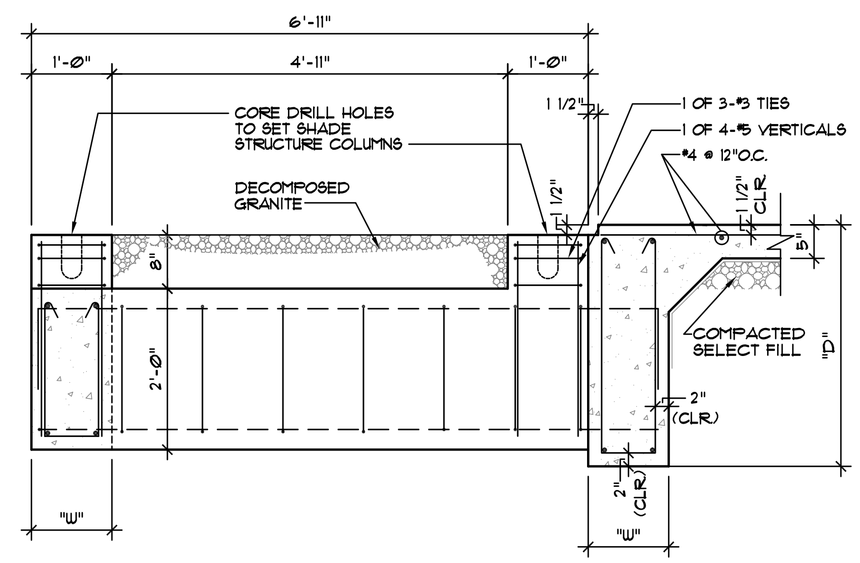

8 SECTION

SCALE : 3/4" = 1'-0" SECT-A

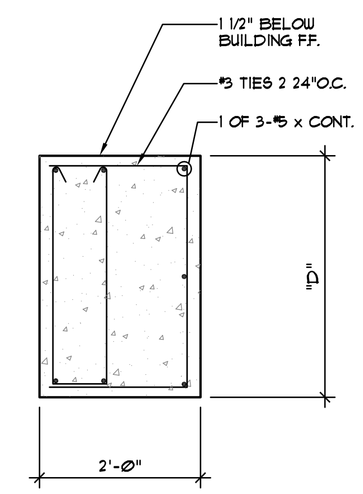

9 SECTION

SCALE : 3/4" = 1'-0" SECT-B

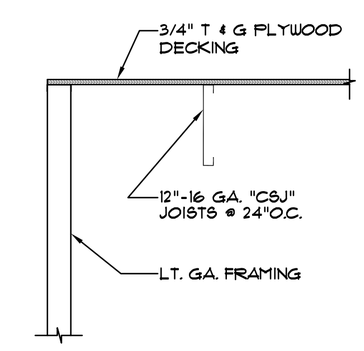

10 SECTION

SCALE : 3/4" = 1'-0" 10821

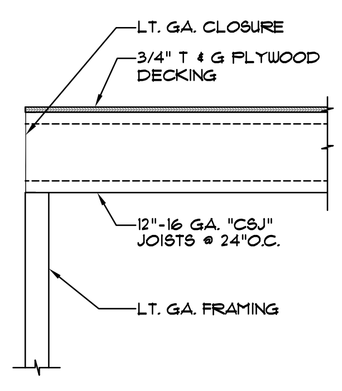

11 SECTION

SCALE : 3/4" = 1'-0" 11821

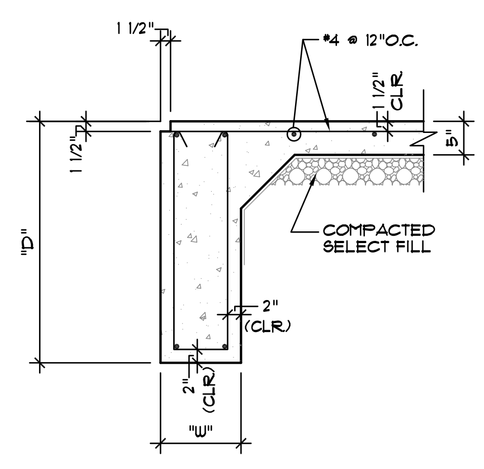

12 SECTION

SCALE : 3/4" = 1'-0" TEB-2

AccuTech Consultants, LLC
STRUCTURAL & FORENSIC ENGINEERING
909 NORTHEAST LOOP 410, SUITE 900
SAN ANTONIO, TEXAS 78209
TEL: (210) 930-5355
FAX: (210) 930-5460
FIRM REG. #F-000007

STATE OF TEXAS
ENRIQUE MARTINEZ
68166
REGISTERED PROFESSIONAL ENGINEER
6/22/12

RICHARD MOGAS
ARCHITECTURE AIA
317 EDINGTON AVENUE SUITE 4 SAN ANTONIO, TEXAS 78215
T210.226.2323 F210.226.1884 WWW.RICHARDMOGAS.COM
INFO@RICHARDMOGAS.COM • COMMERCIAL • RESIDENTIAL • DESIGN

LEON VALLEY LIBRARY ADDITION
6425 Evers, Leon Valley, Texas 78238

SHEET TITLE
SECTIONS AND DETAILS

SHEET:
S2.1
OF 4
Date: JUNE 22, 2012

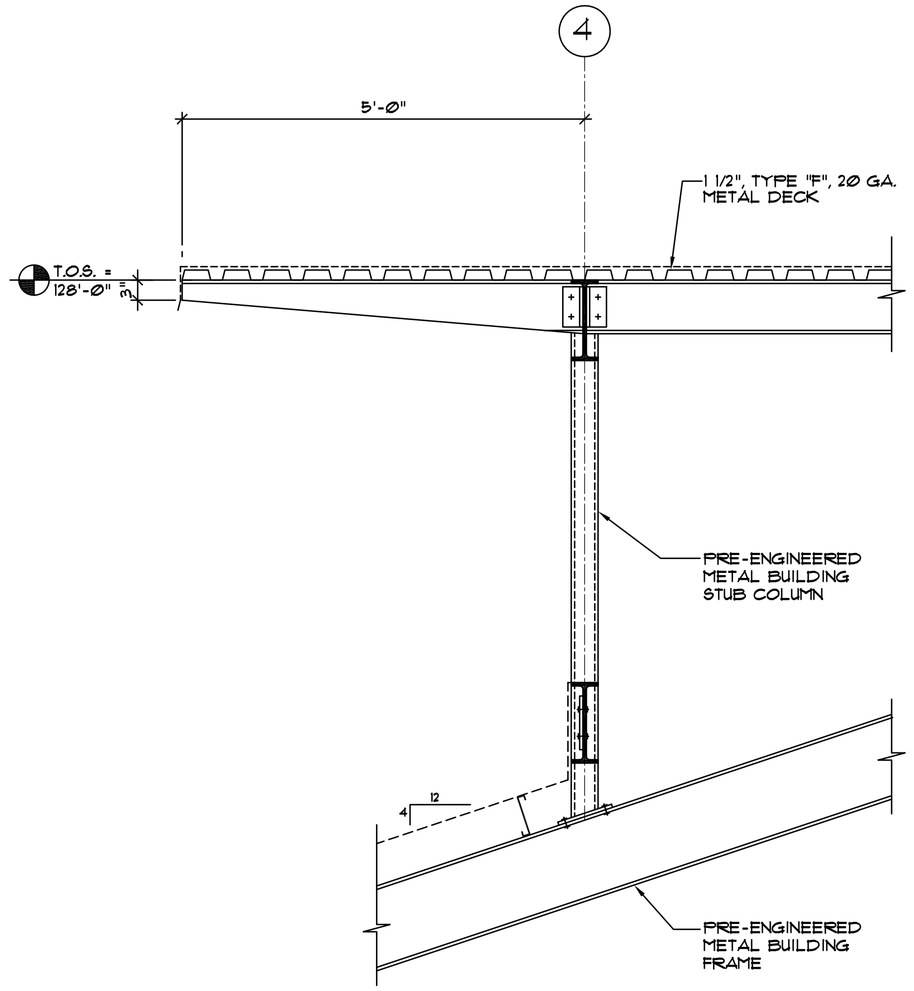

1 SECTION
SCALE : 3/4" = 1'-0"
SECT-F

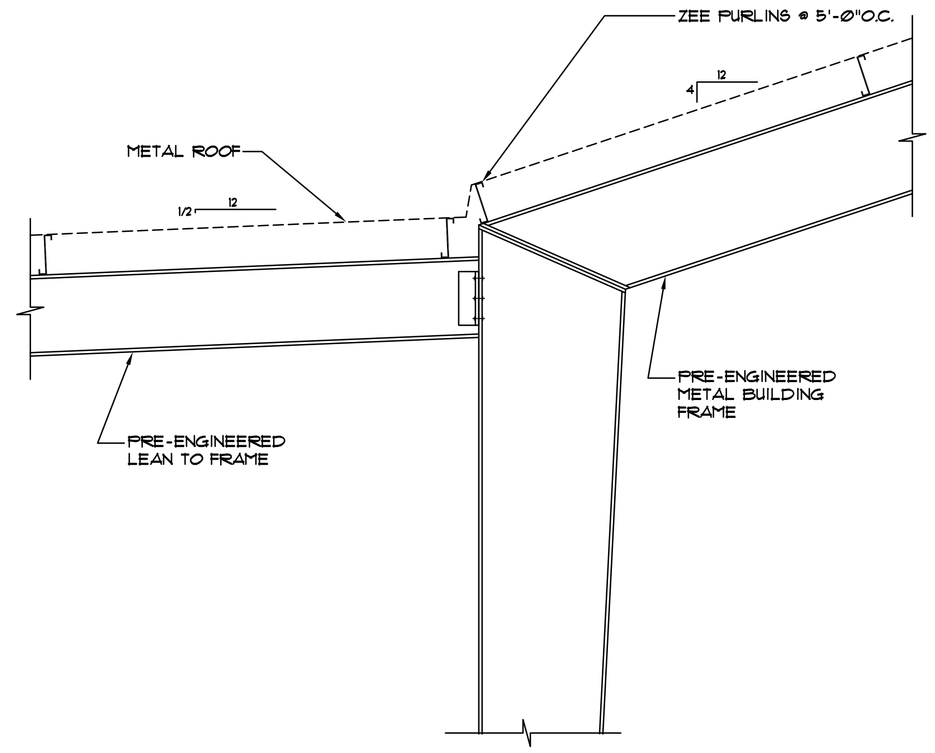

2 SECTION
SCALE : 3/4" = 1'-0"
SECT-G

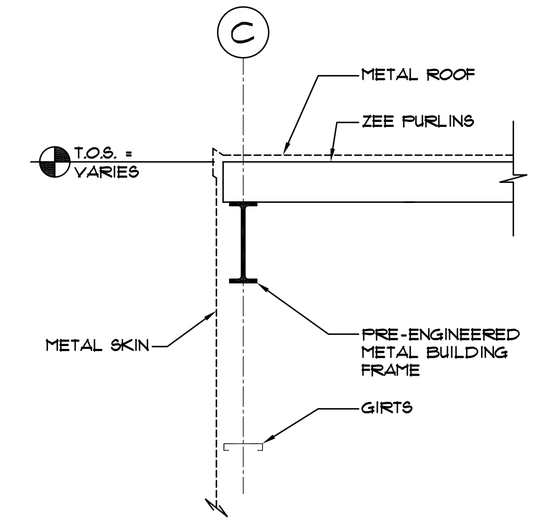

3 SECTION
SCALE : 3/4" = 1'-0"
SECT-A1

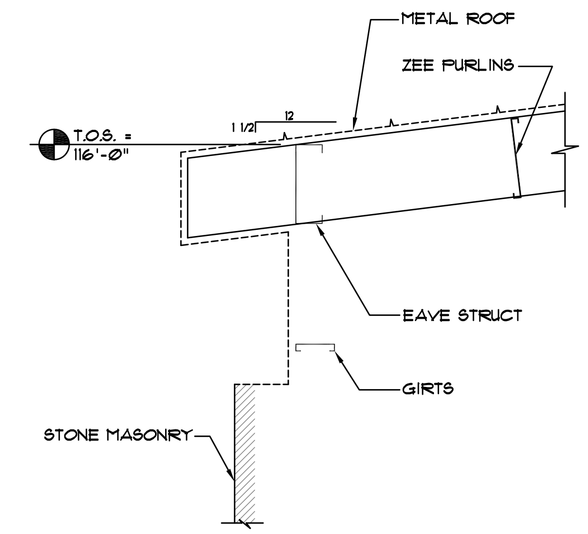

4 SECTION
SCALE : 3/4" = 1'-0"
SECT-B1

RICHARD MOGAS
ARCHITECTURE AIA
317 LEXINGTON AVENUE SUITE 4 SAN ANTONIO, TEXAS 78215
T 210.226.2220 F 210.226.1866 WWW.RICHARDMOGAS.COM
MOGAS@JUNO.COM COMMERCIAL - RESIDENTIAL - REMODEL

LEON VALLEY LIBRARY ADDITION
6425 Evers, Leon Valley, Texas 78238

SHEET TITLE
SECTIONS AND DETAILS

AccuTech Consultants, LLC
STRUCTURAL & FORENSIC ENGINEERING
909 NORTHEAST LOOP 410, SUITE 900
SAN ANTONIO, TEXAS 78209
TEL. (210) 930-5355
FAX (210) 930-5460

STATE OF TEXAS
ENRIQUE MARTINEZ
68166
REGISTERED
PROFESSIONAL ENGINEER
6/22/12
FIRM REG. #F-000007

SHEET:
S2.2
OF 4
Date: JUNE 22, 2012

GENERAL NOTES:

1. THIS STRUCTURE IS DESIGNED IN ACCORDANCE WITH THE 2009 IBC CODE AS AMENDED BY THE CITY OF LEON VALLEY, TEXAS AND APPLICABLE INDUSTRY STANDARDS (AISC,ACI,ETC.)
2. THE DESIGN GRAVITY LOADS ARE:

SUPERIMPOSED DEAD LOADS	
MECHANICAL DUCTS/ CONDUITS, CEILING, ETC.	5 PSF
LIVE LOADS	
ROOF:	20 PSF
FLOOR:	100 PSF
MECHANICAL EQUIP.	AS INDICATED ON PLANS
WIND LOADS	PER IBC SECTION 1609
BASIC WIND SPEED (3 SECOND GUST)	90 MPH
EXPOSURE CLASSIFICATION	B

3. MECHANICAL AND ELECTRICAL CONDUITS IN SLABS SHALL RUN UNDER THE TOP LAYER OF. SLAB REINFORCING. PROVIDE A MINIMUM OF 1 1/2" CLEAR BETWEEN INDIVIDUAL CONDUITS AND BETWEEN CONDUIT AND PARALLEL REINFORCING. DO NOT 'BUNDLE' CONDUITS.
4. UNLESS SHOWN OTHERWISE ON FOUNDATION PLAN DETAILS, CONSTRUCTION JOINTS IN MONOLITHIC CONCRETE FRAMING SHALL HAVE PRIOR APPROVAL OF ARCHITECT AND ENGINEER.
5. REFER TO ARCHITECTURAL, MECHANICAL AND ELECTRICAL DRAWINGS FOR DIMENSIONS, LOCATIONS AND SIZE OF FLOOR DEPRESSIONS, FLOOR AND WALL OPENINGS, SLEEVES, REGLETS, INSERTS, ANCHORS AND BOLTS REQUIRED BY VARIOUS TRADES.
6. PRIOR TO START OF CONSTRUCTION, THE CONTRACTOR AND FABRICATOR SHALL VERIFY ALL QUANTITIES, DIMENSIONS AND CONDITIONS AND NOTIFY ARCHITECT/ENGINEER OF ANY DISCREPANCIES BEFORE PROCEEDING WITH THE WORK.
7. UTILITIES PENETRATING BUILDING SHALL BE FLEXIBLE, USING SLEEVE JOINTS, BENDS, LOOPS, ETC. TO PERMIT MOVEMENTS DUE EXPANSIVE UNDERLYING SOILS.
8. THE USE OF REPRODUCTIONS OF THESE CONTRACT DRAWINGS BY ANY CONTRACTOR, SUBCONTRACTOR, ERECTOR, FABRICATOR, OR MATERIAL SUPPLIER IN LIEU OF PREPARATION OF SHOP DRAWINGS SIGNIFIES HIS ACCEPTANCE OF ALL INFORMATION SHOWN HEREIN AS CORRECT, AND OBLIGATES HIMSELF TO ANY AND ALL EXPENSES, REAL OR IMPLIED ARISING FROM SUCH ACCEPTANCE. THE CONTRACTOR SHALL MAINTAIN THESE DRAWINGS AT A CURRENT STATUS, INCLUDING ALL ADDENDA AND REVISIONS.
9. THE STRUCTURE HAS BEEN DESIGNED TO RESIST DESIGN LOADS ONLY AS A COMPLETED STRUCTURE. ANY PROPOSED APPLICATION OF CONSTRUCTION LOADS OR OF ANY LOADS TO THE PARTIALLY COMPLETED STRUCTURE WHICH EXCEED THE DESIGN LOADS WILL REQUIRE REANALYSIS AND PROBABLE REDESIGN.
10. EXISTING ROOF FRAMING AND FOUNDATION DEPICTED ON THESE DRAWINGS WAS GENERATED FROM ONE A VISIT AND MAY NOT EXACTLY REFLECT ACTUAL EXISTING CONDITIONS AT THIS SITE. CONTRACTOR SHALL VERIFY ASSUMED EXISTING CONDITIONS PRIOR TO CONSTRUCTION AND NOTIFY ARCHITECT/ENGINEER OF ANY DISCREPANCIES TO DRAWINGS AND ANTICIPATE POSSIBLE DETAIL REVISIONS.
11. CONTRACTOR SHALL VERIFY ANY UNDERGROUND UTILITIES PRIOR TO EXCAVATION OF SITE.
12. THE CLIENT HAS OPTED NOT TO CONDUCT A SITE SPECIFIC GEOTECHNICAL INVESTIGATION FOR THIS PROJECT. FOOTINGS AND GRADE BEAMS HAVE BEEN SIZED FOR NORMAL, CONSERVATIVE BEARING VALUES. HOWEVER, CLIENT SHOULD ANTICIPATE SOME FOUNDATION MOVEMENTS DUE TO UNDERLYING CLAY SOILS.

FOUNDATION EARTHWORK NOTES:

1. CONTRACTOR SHALL ROUGH GRADE AND CUT SWALES SO THAT SURFACE WATER WILL DRAIN AWAY FROM BUILDING SITE. MAINTAIN DRAINAGE PROGRAM SO THAT WATER WILL DRAIN AWAY FROM BUILDING SITE DURING ALL PHASES OF CONSTRUCTION. WATER WHICH ACCUMULATES IN TRENCHES AND EXCAVATIONS SHALL BE IMMEDIATELY PUMPED OUT.
2. IN THE BUILDING AREA PLUS 3 FEET ALL AROUND:
   - a) REMOVE ALL ORGANICS (i.e. ROOTS, TREES, GRASS, AND OTHER HUMUS MATERIALS) EXISTING PAVING AND ANY OTHER DELETERIOUS MATERIALS. REMOVE A MINIMUM OF 3 FT. OF THE EXISTING MATERAIL AND ANY ADDITIONAL AMOUNT OF MATERIAL TO ENSURE THAT THE INERT PAD THICKNESS IS A MINIMUM OF 3 FT. (COMPRISED OF THE FLOOR SLAB AND SELECT FILL COMPONENTS OUTLINED SUSEQUENTLY).
   - b) PROOFROLL SUBGRADE WITH A MINIMUM 15 TON PIECE OF EQUIPMENT. GEOTECHNICAL ENGINEER SHALL BE PRESENT TO MONITOR PROOFROLLING.
   - c) SCARIFY AT LEAST 8 INCHES OF THE CUT SOIL SUBGRADE, AND RECOMPACT TO AT LEAST 95% OF THE MAXIMUM DRY DENSITY DETERMINED USING ASTM TEST METHOD D698. MAINTAIN WATER CONTENTS WET WITHIN OPTIMUM TO + 3 PERCENT OF OPTIMUM.
   - d) BRING THE BUILDING PAD TO THE UNDERSIDE OF THE SLAB WITH FLEXIBLE BASE TYPE A + GRADES 1 THROUGH 2+ AS SPECIFIED BY TxDOT, 1993 STANDARD SPECIFICATIONS FOR CONSTRUCTION OF HIGHWAYS, STREETS AND BRIDGES, ITEM 247.
   - e) COMPACT THE AGGRAGATE FILL TO AT LEAST 95% OF THE MAXIMUM DRY DENSITY DETERMINED USING ASTM TEST METHOD D698. HOLD WATER CONTENTS TO WITHIN A RANGE THAT WILL ALLOW THE SPECIFIED PERCENTAGE OF COMPACTION, AND MAINTAIN COMPACTED LIFT THICKNESS TO 8 INCHES OR LESS.
3. TRENCHING FOR GRADE BEAMS AND MECHANICAL LINES SHALL BE PERFORMED AFTER ALL EARTHWORK ABOVE HAS BEEN COMPLETED. TRENCHING SHALL BE CONDUCTED USING A SMOOTH-MOUTHED BUCKET. IF A TOOTHED BUCKET IS USED, EXCAVATION SHALL BE STOPPED AT 12" ABOVE FINAL GRADE AND THE REMAINING EXCAVATION ACCOMPLISHED WITH A SMOOTH-MOUTHED BUCKET OR BY HAND LABOR TO REMOVE ALL LOOSE SOILS DISTURBED BY THE BUCKET TEETH. TRENCHES SHALL BE VERIFIED FOR SIZE TO MAINTAIN CLEARANCES AROUND REINFORCEMENT.
4. PLACE A POLYETHYLENE VAPOR BARRIER, MINIMUM 10 MIL IN THICKNESS. VAPOR BARRIER SHALL NOT EXTEND BELOW MID-DEPTH OF BEAM TRENCHES.
5. EMPLOY AN INDEPENDENT TESTING LABORATORY TO TAKE 3 DENSITY TESTS OF RECOMPACTED ON SITE MATERIAL AND 3 DENSITY TESTS OF EACH LIFT OF FILL.

FOUNDATION NOTES:

1. FOUNDATION SLAB SHALL BE 5" THICK AND REINFORCED WITH #4 @ 12"O.C. EACH WAY PLACED 1-1/2" CLR. FROM TOP. REINFORCING SHALL BE SUPPORTED AT 4'-0"O.C. EACH WAY USING CONCRETE BLOCKS OR BRICKS. DO NOT USE METAL OR PLASTIC CHAIRS.
2. THE GENERAL CONTRACTOR SHALL REFER TO ARCHITECTURAL, MECHANICAL, ELECTRICAL AND EQUIPMENT SUPPLIER DRAWINGS FOR LOCATION AND SIZES OF FLOOR DEPRESSIONS, OPENINGS, INSERTS, SLEEVES, ANCHOR BOLTS AND EMBEDDED ITEMS.
3. ALL BEAM SOFFITS SHALL BEAR 18" MINIMUM INTO NATURAL GRADE OR COMPACTED FILL. ON PERIMETER, INCREASE SCHEDULED BEAM DEPTH AS REQUIRED FOR SOFFIT TO BEAR 18" MINIMUM BELOW FINISH GRADE.
4. AT ALL BEAM CORNERS & T-INTERSECTIONS, PROVIDE 4-#7x7'-0" CORNER BARS (2-TOP AND 2-BOTTOM).
5. TRENCHES SHALL BE VERIFIED FOR SIZE TO MAINTAIN CLEARANCES AROUND REINFORCEMENT PRIOR TO PLACING REINFORCEMENT.
6. WHERE BEAM DEPTHS EXCEED 36", ADD #4@12"O.C. IN EACH FACE OF BEAM.

CONCRETE/REINFORCING NOTES:

1. CONCRETE SHALL BE LABORATORY DESIGNED TO DEVELOP A MINIMUM 28-DAY COMPRESSIVE STRENGTH OF 3000 PSI. USE OF FLY ASH WILL BE PERMITTED UP 20% CEMENT REPLACEMENT BY WEIGHT.(5 SACK MIX)
2. REINFORCING STEEL SHALL BE FROM DOMESTIC, NEW BILLET AND SHALL CONFORM TO THE REQUIREMENTS OF ASTM A615. ALL REINFORCING STEEL SHALL BE GRADE 60.
3. DETAILING OF REINFORCEMENT BARS AND ACCESSORIES SHALL BE IN ACCORDANCE WITH LATEST ACI MANUAL OF STANDARD PRACTICE FOR DETAILING REINFORCED CONCRETE STRUCTURES (ACI 315). BAR SPLICES SHALL BE A LENGTH EQUAL TO A MINIMUM OF 55 BAR DIAMETERS.
4. LOCATIONS OF CONSTRUCTION JOINTS ARE SHOWN ON FOUNDATION PLAN. CONTINUOUS KEYS SHALL BE PROVIDED AND ALL REINFORCING SHALL BE CARRIED THROUGH THE BULKHEADS.
5. SEE ARCHITECTURAL, MECHANICAL, PLUMBING AND ELECTRICAL DRAWINGS FOR LOCATION AND SIZES OF ALL SLAB OPENINGS AND SLEEVES, INSERTS, ANCHORS, AND BOLTS REQUIRED BY ABOVE.
6. REFER TO ARCHITECTURAL DRAWINGS FOR ALL FLOOR FINISHES, DIMENSIONS AND LOCATIONS OF SLAB DROPS AND DEPRESSIONS.
7. MECHANICAL AND ELECTRICAL CONDUITS IN SLABS SHALL RUN UNDER THE TOP LAYER OF SLAB REINFORCING OR WELDED WIRE FABRIC. PROVIDE A MINIMUM OF 1 1/2" CLEAR BETWEEN INDIVIDUAL CONDUITS, AND BETWEEN CONDUIT AND PARALLEL REINFORCING. DO NOT 'BUNDLE' CONDUITS.

SHOP DRAWINGS AND FIELD VISITS

1. THE STRUCTURAL ENGINEER OF RECORD WILL REVIEW SHOP DRAWINGS FOR THE LIMITED PURPOSE OF CHECKING FOR GENERAL CONFORMANCE WITH INFORMATION GIVEN AND THE DESIGN CONCEPT EXPRESSED IN THE CONTRACT STRUCTURAL DOCUMENTS. SUBMITTALS REQUIRED FOR THIS PROJECT INCLUDE, FOUNDATION REINFORCING, CONCRETE MIX DESIGNS AND PRE-ENGINEERED METAL BUILDING.
2. THE STRUCTURAL ENGINEER-OF-RECORD SHALL REVIEW EACH SUBMITTAL AND RETURN THEM WITH ONE OF THE FOLLOWING STATEMENTS CHECKED OFF ON THE STAMP.
   - A "NO EXCEPTIONS TAKEN" INFORMS THE CONTRACTOR THAT THE STRUCTURAL ENGINEER TAKES NO EXCEPTION TO THE SUBMITTAL BEING APPROVED AS PER AND IN ACCORDANCE WITH AIA DOCUMENT 201, SECTION 4.2.7.
   - B "MAKE CORRECTIONS NOTED" INFORMS THE CONTRACTOR THAT THE STRUCTURAL ENGINEER HAS MADE CORRECTIONS OR COMMENTS ON THE SUBMITTALS BUT OTHERWISE TAKES NO EXCEPTION TO THE SUBMITTAL BEING APPROVED AS PER AND IN ACCORDANCE WITH AIA DOCUMENT 201, SECTION 4.2.7.
   - C "REVISE AND RESUBMIT" INDICATES IMPORTANT ITEMS MUST BE CORRECTED AND RESUBMITTED. COMMENTS MADE ON THE SUBMITTAL MAY NOT NECESSARILY COVER ALL OF THE DEFECTS OF THE SUBMITTAL. THIS ACTION CONSTITUTES THE STRUCTURAL ENGINEER'S CONCERN AND HIS RECOMMENDATION TO THE CONTRACTOR THAT THE SUBMITTAL BE REVIEWED AND RESUBMITTED AS PER AND IN ACCORDANCE WITH AIA DOCUMENT 201, SECTION 4.2.7
   - D "RETURN ONE CORRECTED COPY FOR FILE" INFORMS THE CONTRACTOR THAT THE SUBMITTAL MAY BE APPROVED AS PER AIA DOCUMENT 201, SECTION 4.2.7, BUT A SINGLE CORRECTED COPY SHOWING THAT CORRECTIONS HAVE BEEN ACKNOWLEDGED MUST BE RETURNED FOR THE STRUCTURAL ENGINEER'S FILE.
3. STRUCTURAL ENGINEER SHALL BE NOTIFIED AT LEAST 24 HOURS IN ADVANCE OF ANY CONCRETE POUR OR OTHER ACTION THAT WILL COVER UP STRUCTURAL ELEMENTS THAT HAVE NOT BEEN OBSERVED BY AN AUTHORIZED REPRESENTATIVE OF THE OFFICE OF THE STRUCTURAL ENGINEER OF RECORD.
4. THE STRUCTURAL ENGINEER-OF-RECORD ("SER") WILL MAKE A SITE VISIT AT APPROPRIATE STAGES OF CONSTRUCTION AND AS DEFINED BY THE CONTRACT TO VISUALLY OBSERVE THE QUALITY AND THE PROGRESS OF THE CONSTRUCTION WORK RELATIVE TO THE PRIMARY STRUCTURAL SYSTEM. THE GENERAL CONTRACTOR IS RESPONSIBLE TO NOTIFY THE SER WHEN STRUCTURAL ELEMENTS ARE READY FOR REVIEW AND PRIOR TO THEIR BEING COVERED UP. FAILURE TO DO SO MAY RESULT IN KEY OBSERVATIONS NOT BEING MADE, PREVENTING THE ENGINEER FROM RECOMMENDATING ACCEPTANCE OF THE WORK. A WRITTEN REPORT WILL BE MADE OF EACH VISIT DESCRIBING WHAT WAS OBSERVED AND LISTING DISCREPANCIES, IF ANY. IF A SUBSEQUENT VISIT IS NECESSARY IT WILL BE SO NOTED ON THE REPORT.
5. THE SER SHALL NOT HAVE CONTROL OVER OR CHARGE OF AND SHALL NOT BE RESPONSIBLE FOR MEANS AND METHODS OF CONSTRUCTION, TECHNIQUES, SEQUENCES OR PROCEDURES, OR FOR SAFETY PRECAUTIONS AND PROGRAMS IN CONNECTION WITH THE WORK FOR THIS PART OF THE PROJECT. THESE ARE SOLELY THE CONTRACTOR'S RESPONSIBILITY UNDER THE CONTRACT FOR CONSTRUCTION. THE SER SHALL NOT BE RESPONSIBLE FOR THE CONTRACTOR'S OR A SUBCONTRACTOR'S SCHEDULE OR FAILURE TO CARRY OUT THE WORK IN ACCORDANCE WITH THE CONTRACT DOCUMENTS. THE SER SHALL NOT HAVE CONTROL OVER OR CHARGE OF ACT OR OMISSIONS OF THE CONTRACTOR, SUBCONTRACTORS, THEIR AGENTS OR EMPLOYEES OR OTHER PERSONS PERFORMING PORTIONS OF THE WORK.

PRE-ENGINEERED METAL CANOPY NOTES:

1. THE CONTRACTOR SHALL VERIFY ALL DIMENSIONS AND SITE CONDITIONS PRIOR TO DESIGN, FABRICATION, OR ERECTION OF PRE-ENGINEERED METAL BUILDING.
2. PRE-ENGINEERED METAL BUILDING SHALL BE DESIGNED AND SEALED BY A LICENSED PROFESSIONAL ENGINEER HAVING THREE (3) OR MORE YEARS EXPERIENCE IN THE DESIGN OF THE TYPE OF BUILDING INDICATED ON THE CONTRACT DOCUMENTS.
3. THE METAL BUILDING AND COMPONENTS SHALL BE DESIGNED AS PER THE METAL BUILDING MANUFACTURERS ASSOCIATION, UNLESS LOCAL CODES REQUIRE STRICTER LIMITATIONS. MINIMUM REQUIREMENTS SHALL BE AS FOLLOWS:

WIND SPEED	90 MPH
BUILDING DRIFT	H/360
GIRT DEFLECTION	
METAL SIDING	H/180
CONCRETE PANELS	H/360

4. THE METAL BUILDING AND COMPONENTS SHALL BE DESIGNED TO CARRY ITS OWN WEIGHT PLUS ALL SUPERIMPOSED DEAD AND LIVE LOADS INCLUDING WIND LOADS. VERIFY ALL LOADS WITH MECHANICAL, ELECTRICAL AND ARCHITECTURAL PLANS.
5. DESIGN AND MEMBERS FOR FRAMED OPENINGS SHALL BE PROVIDED AS PART OF THE METAL BUILDING DESIGN.
6. THE CONTRACTOR SHALL PROVIDE DOCUMENTATION INDICATING DESIGN LOADS, DESIGN ASSUMPTIONS, INTENT AND CRITERIA USED PRIOR TO FABRICATION OF METAL CANOPY AND COMPONENTS.
7. THE ANCHOR BOLTS FOR CONNECTING THE PRE-ENGINEERED METAL BUILDING FRAMES TO THE NEW FOUNDATION WILL BE DESIGNED BY THE METAL BUILDING MANUFACTURER. THE CONTRACTOR SHALL COORDINATE THE CONNECTION OF THE BUILDING FRAME WITH THE SUPPLIER PRIOR TO CONSTRUCTION.
8. THE FOUNDATION HAS BEEN DESIGNED USING ASSUMED REACTIONS FOR THE PRE-ENGINEERED METAL BUILDING COMPONENTS. THE CONTRACTOR SHALL SUBMIT BASE CONNECTION DETAILS AND REACTIONS OF THE CANOPY FRAMES TO THE A/E PRIOR TO CONSTRUCTION SO THE DESIGN ASSUMPTIONS AND FOUNDATION CONNECTIONS CAN BE VERIFIED.
9. ANY ADDITIONAL COST OF FOUNDATION WORK REQUIRED BY REVISIONS OF THE FOUNDATION DESIGN AFTER PRE-ENGINEERED BUILDING REACTIONS AND DETAILS ARE SUBMITTED SHALL BE THE RESPONSIBILITY OF THE CONTRACTOR.
10. FRAMING PLAN AND DETAILS SHOWN IN THIS CONSTRUCTION SET ARE INTENDED TO CONVEY DESIGN CONCEPT ONLY AND SHALL BE CONSIDERED SCHEMATIC IN NATURE.

GRADE BEAM SCHEDULE

MK	WxD	MAIN REINFORCING	TIES	REMARKS
GB1	12x36	2-#8xCONT. TOP & BOTTOM	#3 @ 24"O.C.	
GB2	12x18	2-#6xCONT. TOP & BOTTOM	#3 @ 12"O.C.	

AccuTech Consultants, LLC
STRUCTURAL & FORENSIC ENGINEERING
909 NORTHEAST LOOP 410, SUITE 900
SAN ANTONIO, TEXAS 78209
TEL. (210) 930-5355
FAX (210) 930-5460
FIRM REG. #F-000007

STATE OF TEXAS
ENRIQUE MARTINEZ
68166
REGISTERED
PROFESSIONAL ENGINEER
6/22/12

RICHARD MOGAS
ARCHITECTURE AIA
317 LEXINGTON AVENUE SUITE 4 SAN ANTONIO, TEXAS 78215
T 210.226.2220 F 210.226.1846 WWW.RICHARDMOGAS.COM
MOGAS@JUNO.COM COMERCIAL - RESIDENTIAL - REMODEL

LEON VALLEY LIBRARY ADDITION
6425 Evers, Leon Valley, Texas 78238

SHEET TITLE
GENERAL NOTES/ SECTIONS/DETAILS