CITY OF LEON VALLEY

BID SET FOR CONSTRUCTION

GENERAL NOTES

1. ALL UTILITY LOCATIONS SHOWN ARE APPROXIMATE ONLY. IT IS THE RESPONSIBILITY OF THE CONTRACTOR TO LOCATE ALL THE EXISTING UNDERGROUND UTILITIES PRIOR TO ANY EXCAVATION. ANY DAMAGE TO UTILITIES WILL BE CONTRACTORS RESPONSIBILITY.
2. ALL CONSTRUCTION METHODS AND MATERIALS IF NOT SHOWN SHALL BE PER STANDARD SPECIFICATIONS OF THE CITY OF LEON VALLEY.
3. CONTRACTOR IS TO OBTAIN ALL NECESSARY PERMITS.
4. CONTRACTOR WILL BE REQUIRED TO PROVIDE ENGINEER WITH TEST RESULTS FOR TWO EACH PASSING DENSITY CHECKS FOR SUBGRADE AND FLEXIBLE BASE TO INCLUDE PROCTOR CURVE DATA FROM A TESTING LABORATORY APPROVED BY THE ENGINEER.
5. PROVIDE A MINIMUM OF 2" CONCRETE COVER OVER ALL REINFORCING.
6. PROVIDE EXPANSION JOINTS FOR CONCRETE CURBS, SIDEWALKS AND CONCRETE PAVEMENT. CUT TO SHAPE EVERY 40' AND AT ANGLE POINTS AND RETURNS.
7. ALL REINFORCING STEEL SHALL BE CONTINUOUS WITH SPLICES LAPPED 40 DIAMETERS. GRADE 60 KSI.
8. ALL CONCRETE SHALL HAVE A MINIMUM COMPRESSIVE STRENGTH OF 3000 P.S.I. @ 28 DAYS, UNLESS OTHERWISE NOTED.
9. CONTRACTOR TO SECURE TEXAS POLLUTANT DISCHARGE ELIMINATION SYSTEM (TPDES) STORMWATER CONSTRUCTION PERMIT FROM TCEQ.
10. CONTRACTOR TO CONTACT UTILITY LOCATOR AT 811. AT THE CITY OF LEON VALLEY 210-681-1850.
11. SIDEWALK CROSS SLOPE NOT TO EXCEED 2%.
12. PAVING TO BE REMOVED WILL BE SAWCUT ON A CLEAN LINE. ANY SUBCONTRACTOR WHO DAMAGES PAVING NOT DESIGNATED FOR REMOVAL SHALL PATCH AND REPAIR DAMAGED AREAS.
13. CONTRACTOR SHALL PROTECT ALL EXISTING MAILBOXES, UTILITIES, SPRINKLER SYSTEMS, AND METER/BOXES. ANY ADJUSTMENTS WILL BE INCIDENTAL (AND N.S.P.I.).

ESTIMATED QUANTITIES

TIMBERHILL DRIVE & HUEBNER ROAD

DIVISION I
EARTHWORK

ITEM	DESCRIPTION	UNIT	QUANTITY
100.1	MOBILIZATION	L.S.	1
100.2	INSURANCE & BOND	L.S.	1
101.1	PREPARING RIGHT OF WAY	L.S.	1
103.1	REMOVE CONCRETE CURB (X<700 L.F.)	L.F.	578
103.3	REMOVE CONCRETE SIDEWALKS & DRIVES (1,000 S.F.<3,000 S.F.)	S.F.	1,454
103.4	REMOVE MISCELLANEOUS CONCRETE (RIP-RAP AND RETAINING WALL)	S.F.	262
104.1	STREET EXCAVATION (<1,000 C.Y.)	C.Y.	750

DIVISION II
BASE/SURFACE COURSES

ITEM	DESCRIPTION	UNIT	QUANTITY
200.1	FLEXIBLE BASE (10" COMPACTED DEPTH)	S.Y.	1,111
202.1	PRIME COAT	GAL.	222
203.1	TACK COAT	GAL.	140
205.2	HOT MIX ASPHALTIC PAVEMENT, TYPE B (3" COMP. DEPTH)	S.Y.	1,074
205.4	HOT MIX ASPHALTIC PAVEMENT, TYPE D (2" COMP. DEPTH)(X< 5,000 S.Y.)	S.Y.	1,074
208.1	SALVAGING, HAULING & STOCKPILING RECLAIMABLE ASPHALTIC PAVEMENT (2")	S.Y.	719

DIVISION IV
STORM SEWERS

ITEM	DESCRIPTION	UNIT	QUANTITY
403.2	JUNCTION BOX 5'x5'x5'	EACH	1
403.7	CURB INLET TYPE I (COMPLETE)(10 FT)	EACH	3
403.8	CURB INLET TYPE C (COMPLETE)(10 FT)	EACH	1
403.9	INLET EXTENSIONS (10 FT)	EACH	4
403.12	SPECIAL INLET (4-WAY)	EACH	1
404.1	CORRUGATED METAL PIPE (24" DIA)	L.F.	380

DIVISION V
MISCELLANEOUS CONSTRUCTION

ITEM	DESCRIPTION	UNIT	QUANTITY
500.1	CONCRETE CURBING (X<1,000 L.F.)	L.F.	578
502.1	CONCRETE SIDEWALKS (150 S.Y.<X<1,000 S.Y.)	S.Y.	162
505.1	CONCRETE RIP-RAP (6"THICK)(X<4,000 S.Y.)	S.Y.	37
506.1	CONCRETE RETAINING WALLS COMB. TYPE (X<20 C.Y.)	C.Y.	1
535.1	4 INCH WIDE YELLOW LINE (X<100,000 L.F.)	L.F.	600
535.7	24" WIDE WHITE LINE (X<1,500 L.F.)	L.F.	21
537.5	RAISED PAVEMENT MARKER	EACH	25

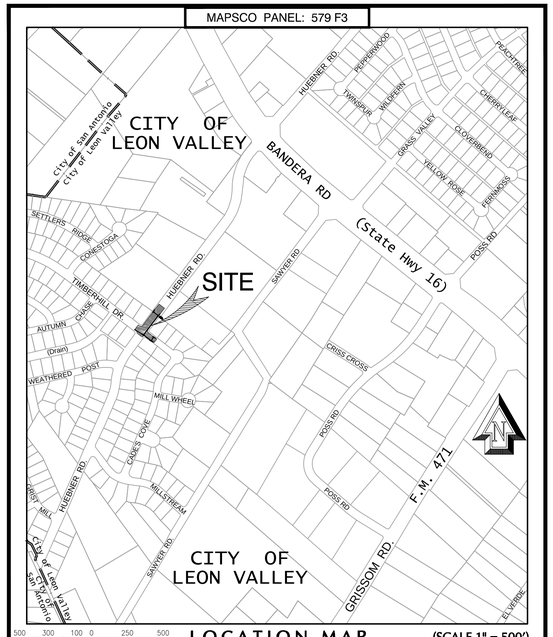

INDEX TO DRAWINGS

1. COVER SHEET
2. HUEBNER ROAD DEMOLITION PLAN
3. TIMBERHILL DRIVE PLAN & PROFILE
4. HUEBNER ROAD PLAN & PROFILE
5. HUEBNER ROAD STREET RECONSTRUCTION
6. DETAILS
7. DETAILS
8. DETAILS

PREPARED BY

SIA ENGINEERING, INC.

TBPE FIRM NO.: F-1892 TBLS FIRM NO.: 100380-00

6977 SAN PEDRO AVE.

SAN ANTONIO, TEXAS 78216-6245

(210) 341-5500 FAX (210) 308-0662

STATE OF TEXAS
DAVID A. GALVAN
81950
REGISTERED
PROFESSIONAL ENGINEER

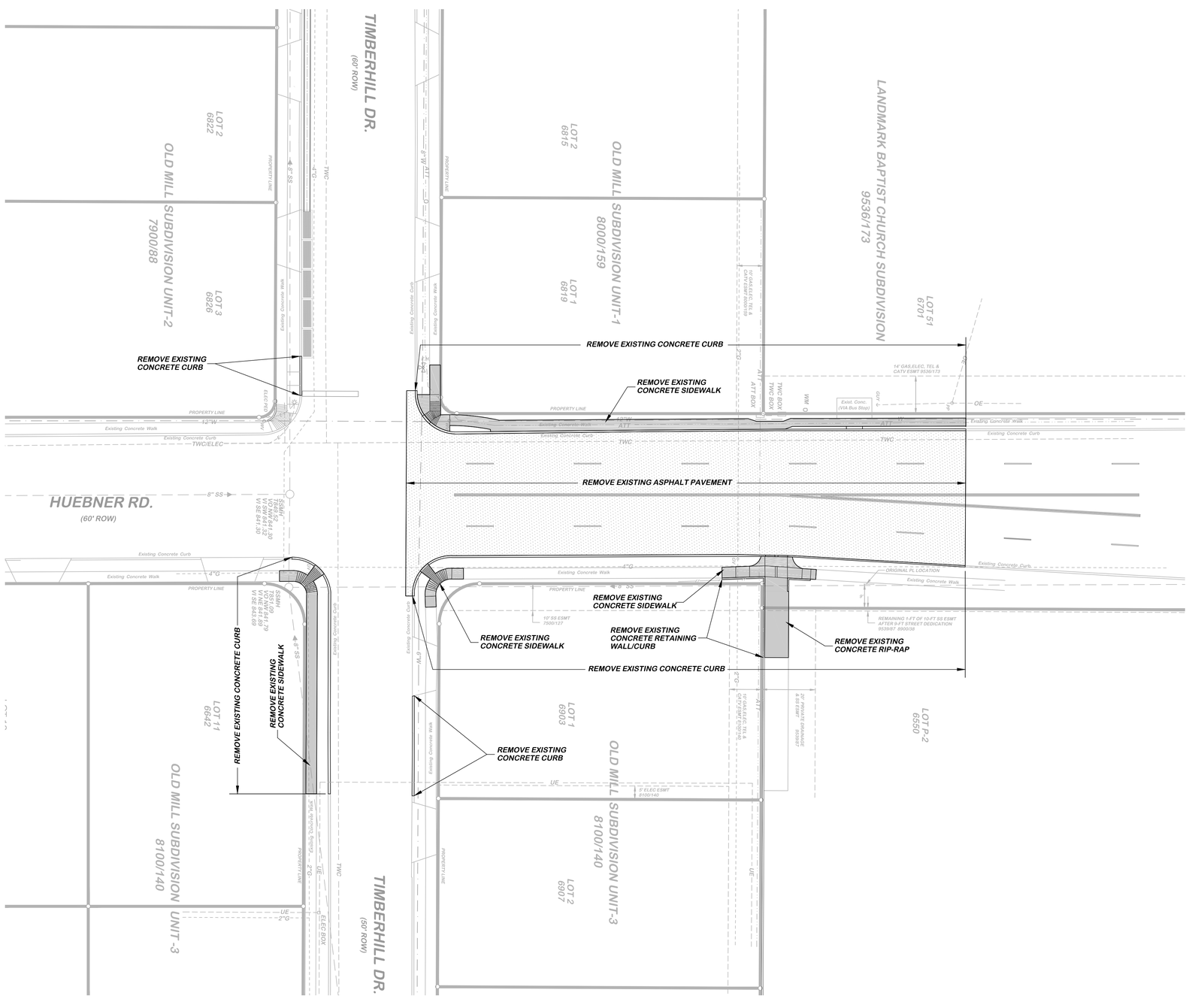

SCALE: 1"=20'

20 0 10 20 40

DEMO LEGEND

EXISTING CONCRETE TO BE REMOVED

EXISTING ASPHALT TO BE REMOVED

NOTE: THE ITEMS SHOWN TO BE REMOVED ARE SHOWN FOR ILLUSTRATION ONLY AND IS NOT THE INTENTION OF THE ENGINEER TO SPECIFY THE METHOD OR ANY OTHER REQUIREMENT BY WHICH THESE VARIOUS ITEMS ARE TO BE REMOVED.

F-1892
SIA ENGINEERING, INC.
6977 SAN PEDRO AVE.
SAN ANTONIO, TEXAS 78216-6245
(210) 341-5500 FAX (210) 308-0662

STATE OF TEXAS
DAVID A. GALVAN
81950
REGISTERED PROFESSIONAL ENGINEER

DATE:	JAN. 21, 2015
DESIGNED BY:	D.A.G.
DRAWN BY:	K.F.K.
CHECKED BY:	D.A.G.
SCALE: HOR.:	1" = 20'
VERT.:	1" = 5'

STREET RECONSTRUCTION
HUEBNER ROAD
DEMOLITION PLAN

TIMBERHILL & HUEBNER

CITY OF LEON VALLEY

BEXAR COUNTY, TEXAS

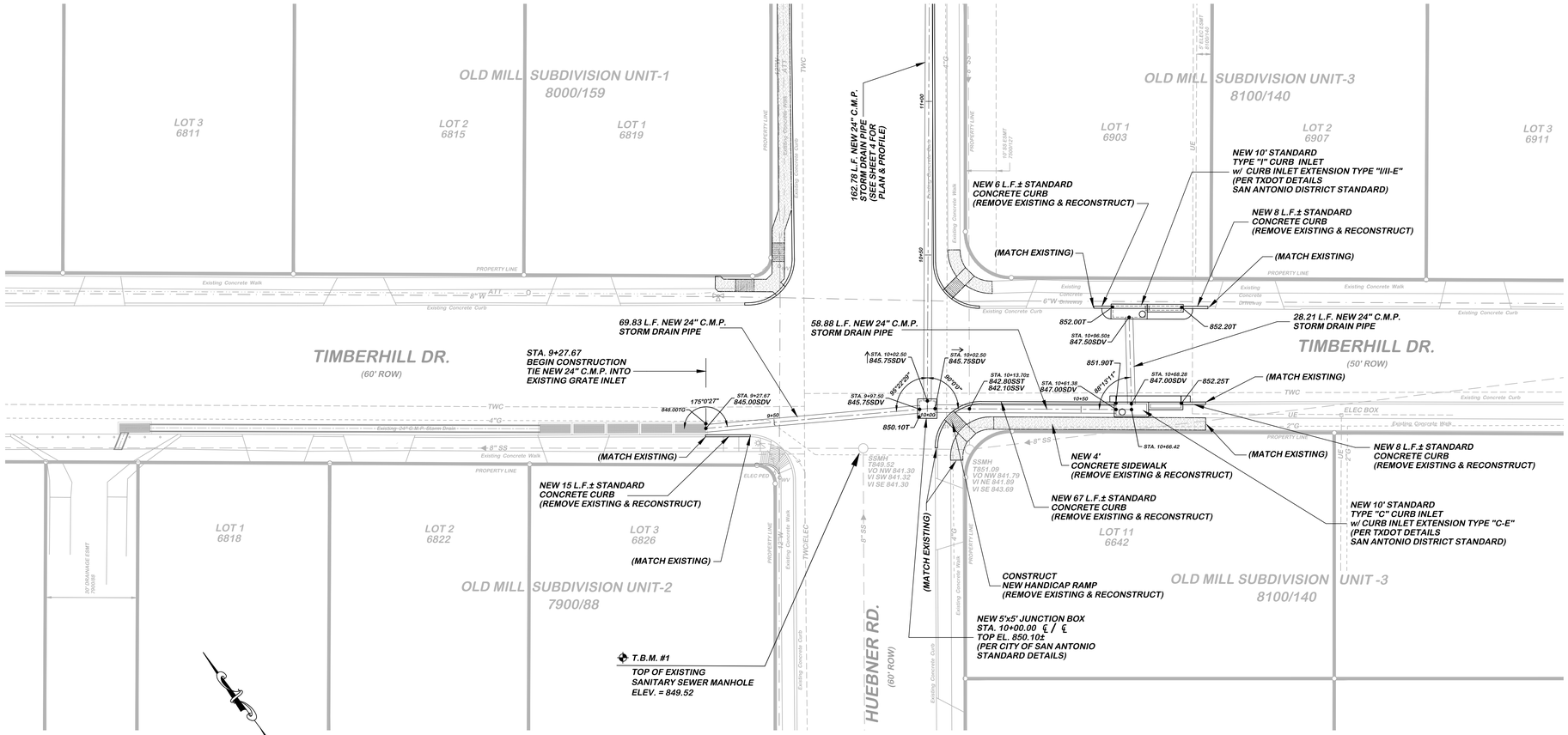

TIMBERHILL DRIVE

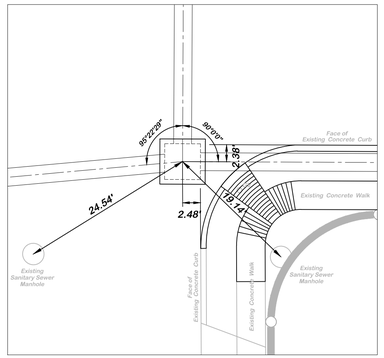

5' x 5' JUNCTION BOX LOCATION DETAIL

SCALE: 1" = 10'

PROFILE LEGEND

- EXISTING CENTERLINE
- EXISTING GROUND AT RIGHT T/C & G
- PROPOSED GRADE, ETC.

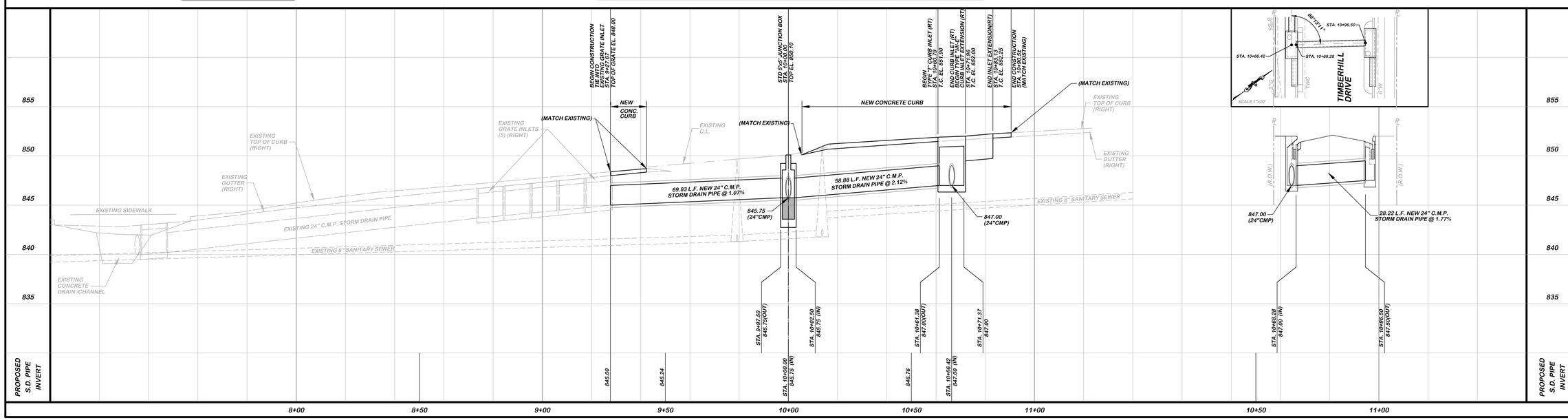

F-1892

SIA ENGINEERING, INC.
6977 SAN PEDRO AVE.
SAN ANTONIO, TEXAS 78216-6245
(210) 341-5500 FAX (210) 308-0662

STATE OF TEXAS — DAVID A. GALVAN — 81950 — REGISTERED PROFESSIONAL ENGINEER

DATE:	JAN. 21, 2015
DESIGNED BY:	D.A.G.
DRAWN BY:	K.F.K.
CHECKED BY:	D.A.G.
SCALE: HOR.:	1" = 20'
VERT.:	1" = 5'

DRAINAGE MODIFICATION TIMBERHILL DRIVE
PLAN & PROFILE
STA. 9+27.67 TO STA. 10+90.5±

TIMBERHILL & HUEBNER
CITY OF LEON VALLEY
BEXAR COUNTY, TEXAS

SHEET 3 OF 8

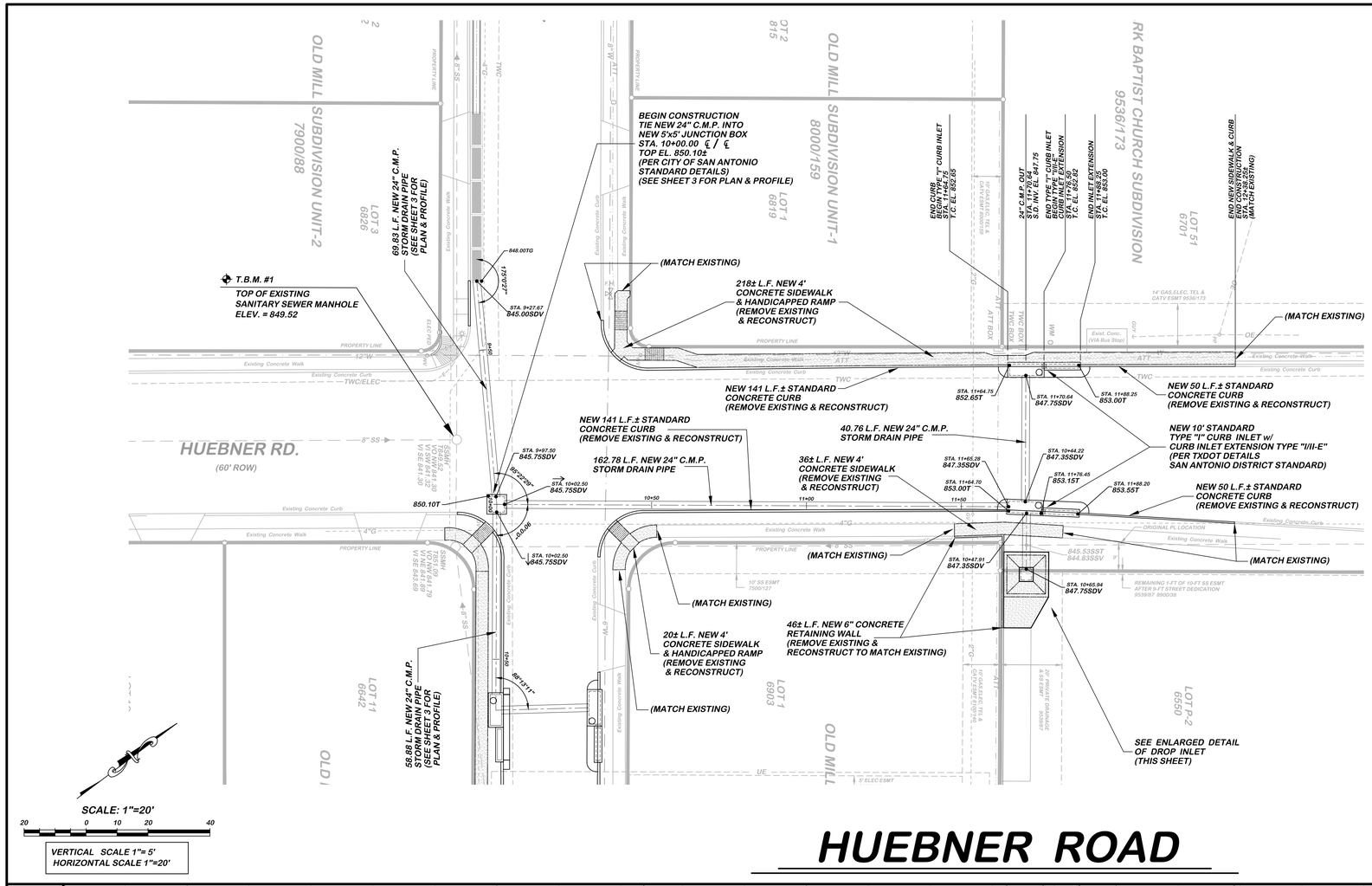

HUEBNER ROAD

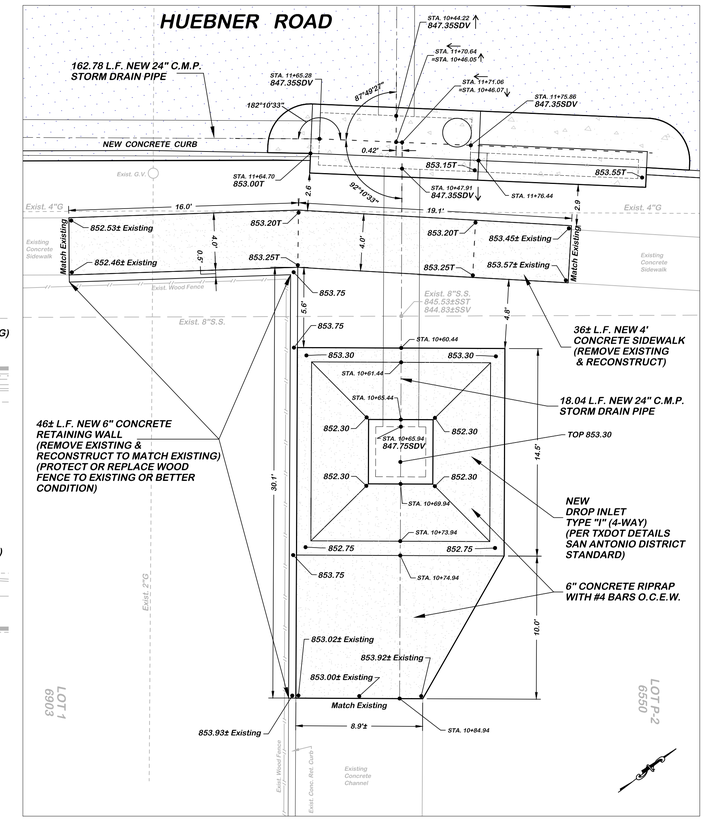

DETAIL OF 4-WAY DROP INLET & RIP-RAP

SCALE: 1" = 5.0'

PROFILE LEGEND

- EXISTING CENTERLINE
- EXISTING GROUND AT RIGHT T/C & G
- PROPOSED GRADE, ETC.

SDV = Storm Drain Invert
T = Top Elevation (Concrete)
SST = Sanitary Sewer Top of Pipe
SSV = Sanitary Sewer Invert

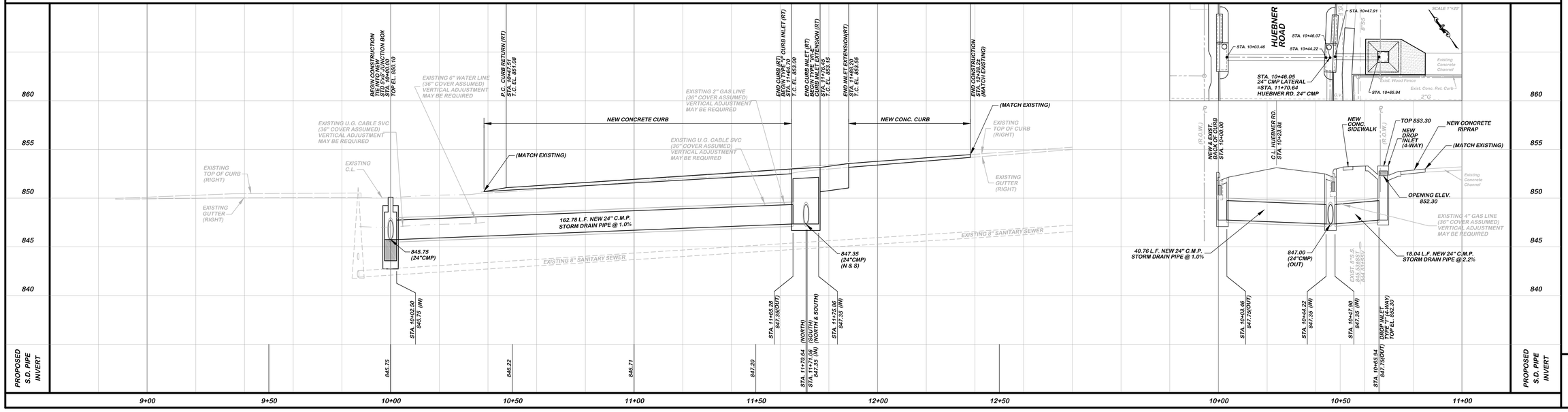

F-1892

SIA ENGINEERING, INC.
6977 SAN PEDRO AVE.
SAN ANTONIO, TEXAS 78216-6245
(210) 341-5500 FAX (210) 308-0662

STATE OF TEXAS — DAVID A. GALVAN — 81950 — REGISTERED PROFESSIONAL ENGINEER

DATE:	JAN. 21, 2015
DESIGNED BY:	D.A.G.
DRAWN BY:	K.F.K.
CHECKED BY:	D.A.G.
SCALE: HOR.:	1" = 20'
VERT.:	1" = 5'

DRAINAGE MODIFICATION
HUEBNER ROAD
PLAN & PROFILE
STA. 10+00.00 TO STA. 12+38.2 ±

TIMBERHILL & HUEBNER
CITY OF LEON VALLEY
BEXAR COUNTY, TEXAS

SHEET 4 OF 8

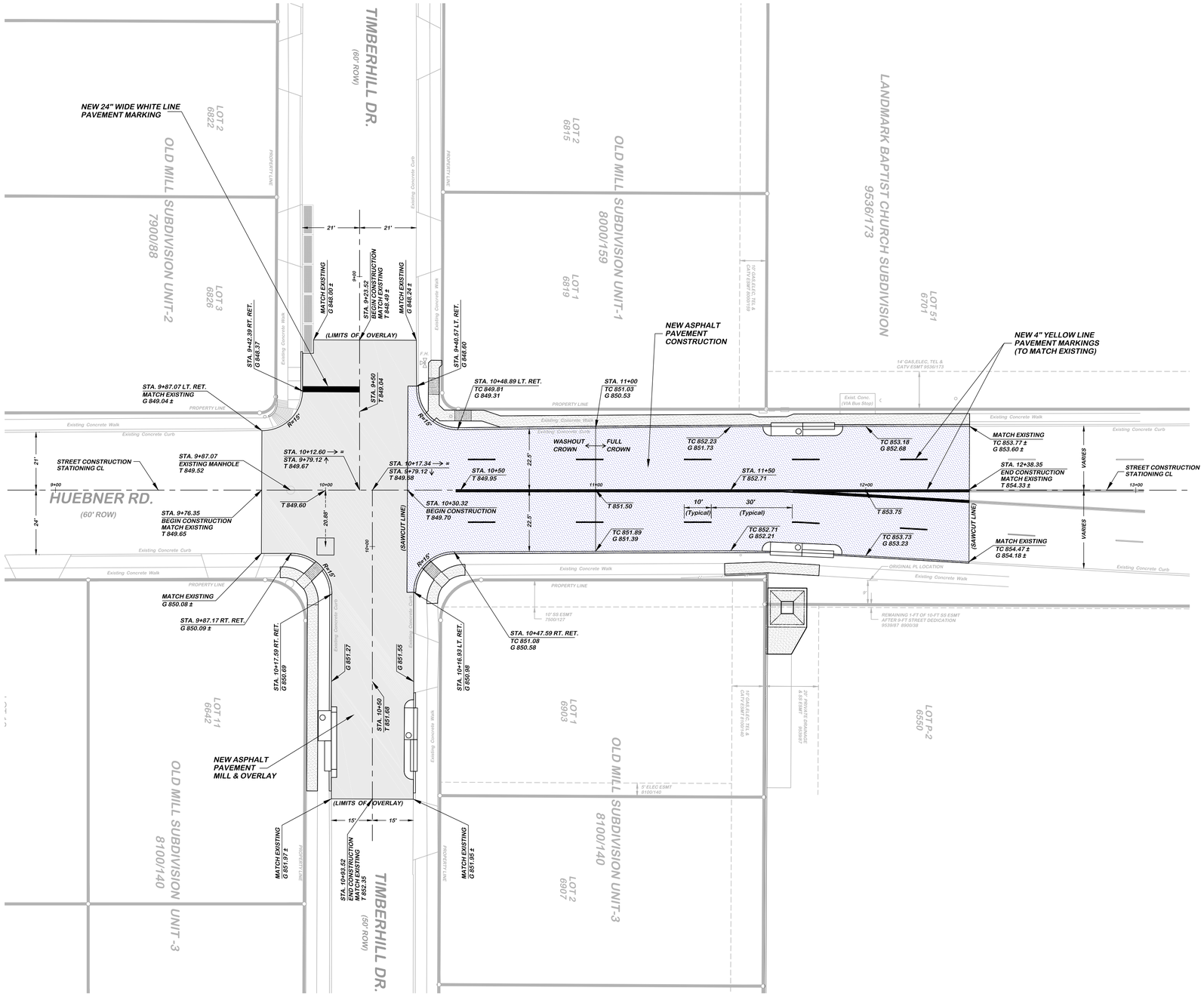

PLAN LEGEND

- NEW ASPHALT PAVEMENT
- NEW CONCRETE CONSTRUCTION
- NEW ASPHALT MILL & OVERLAY
- NEW CONCRETE CURB

GENERAL NOTES

1. ALL UTILITY LOCATIONS SHOWN ARE APPROXIMATE ONLY. IT IS THE RESPONSIBILITY OF THE CONTRACTOR TO LOCATE ALL THE EXISTING UNDERGROUND UTILITIES PRIOR TO ANY EXCAVATION. ANY DAMAGE TO UTILITIES WILL BE CONTRACTORS RESPONSIBILITY.
2. ALL CONSTRUCTION METHODS AND MATERIALS IF NOT SHOWN SHALL BE PER STANDARD SPECIFICATIONS OF THE CITY OF LEON VALLEY.
3. CONTRACTOR IS TO OBTAIN ALL NECESSARY PERMITS.
4. CONTRACTOR WILL BE REQUIRED TO PROVIDE ENGINEER WITH TEST RESULTS FOR TWO EACH PASSING DENSITY CHECKS FOR SUBGRADE AND FLEXIBLE BASE TO INCLUDE PROCTOR CURVE DATA FROM A TESTING LABORATORY APPROVED BY THE ENGINEER.
5. PROVIDE A MINIMUM OF 2" CONCRETE COVER OVER ALL REINFORCING.
6. PROVIDE EXPANSION JOINTS FOR CONCRETE CURBS, SIDEWALKS AND CONCRETE PAVEMENT. CUT TO SHAPE EVERY 40' AND AT ANGLE POINTS AND RETURNS.
7. ALL REINFORCING STEEL SHALL BE CONTINUOUS WITH SPLICES LAPPED 40 DIAMETERS. GRADE 60 KSI.
8. ALL CONCRETE SHALL HAVE A MINIMUM COMPRESSIVE STRENGTH OF 3000 P.S.I. @ 28 DAYS, UNLESS OTHERWISE NOTED.
9. CONTRACTOR TO SECURE TEXAS POLLUTANT DISCHARGE ELIMINATION SYSTEM (TPDES) STORMWATER CONSTRUCTION PERMIT FROM TCEQ.
10. CONTRACTOR TO CONTACT UTILITY LOCATOR AT 811. AT THE CITY OF LEON VALLEY 210-681-1850.
11. SIDEWALK CROSS SLOPE NOT TO EXCEED 2%.
12. PAVING TO BE REMOVED WILL BE SAWCUT ON A CLEAN LINE. ANY SUBCONTRACTOR WHO DAMAGES PAVING NOT DESIGNATED FOR REMOVAL SHALL PATCH AND REPAIR DAMAGED AREAS.
13. CONTRACTOR SHALL PROTECT ALL EXISTING MAILBOXES, UTILITIES, SPRINKLER SYSTEMS, AND METER/BOXES. ANY ADJUSTMENTS WILL BE INCIDENTAL (AND N.S.P.I.).

F-1892
SIA ENGINEERING, INC.
6977 SAN PEDRO AVE.
SAN ANTONIO, TEXAS 78216-6245
(210) 341-5500 FAX (210) 308-0662

STATE OF TEXAS REGISTERED PROFESSIONAL ENGINEER DAVID A. GALVAN 81950

DATE:	JAN. 21, 2015
DESIGNED BY:	D.A.G.
DRAWN BY:	K.F.K.
CHECKED BY:	D.A.G.
SCALE: HOR.:	1" = 20'
VERT.:	1" = 5'

STREET RECONSTRUCTION
HUEBNER ROAD
MILL AND OVERLAY
TIMBERHILL DRIVE

TIMBERHILL & HUEBNER

CITY OF LEON VALLEY

BEXAR COUNTY, TEXAS

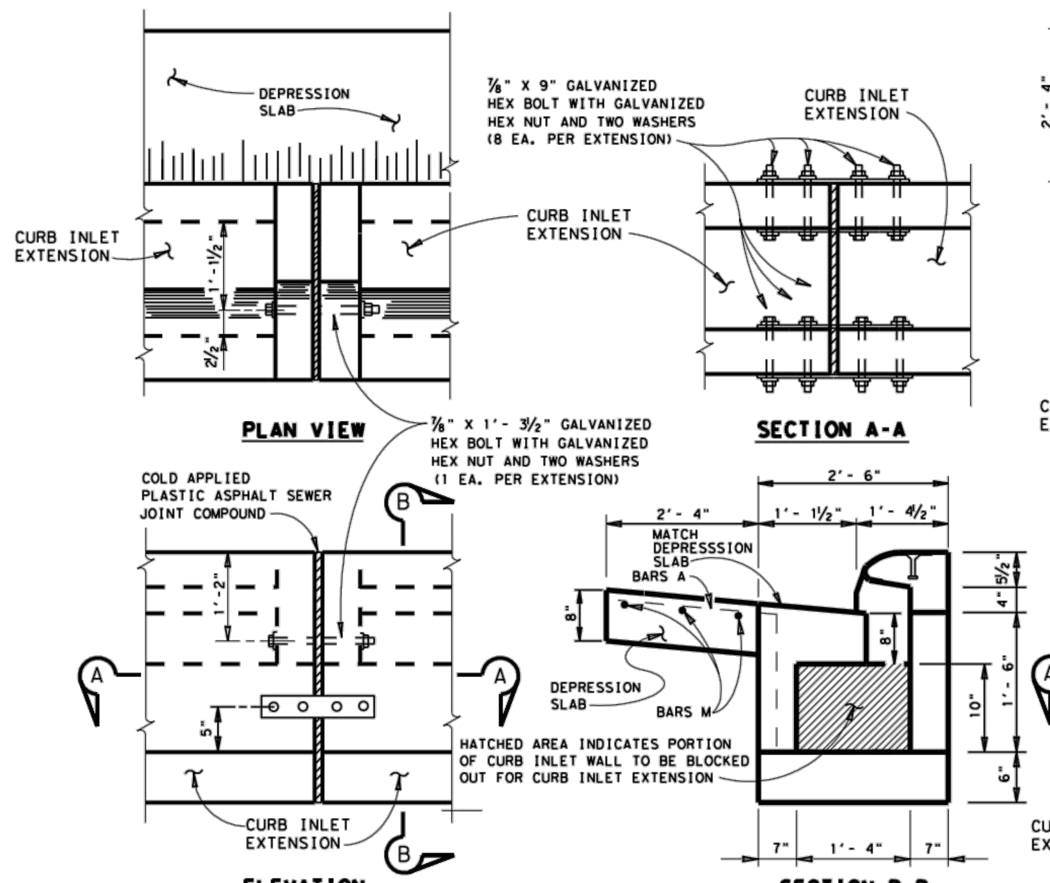

INLET BOLTING DETAILS
(SHOWING EXTENSION TO EXTENSION)

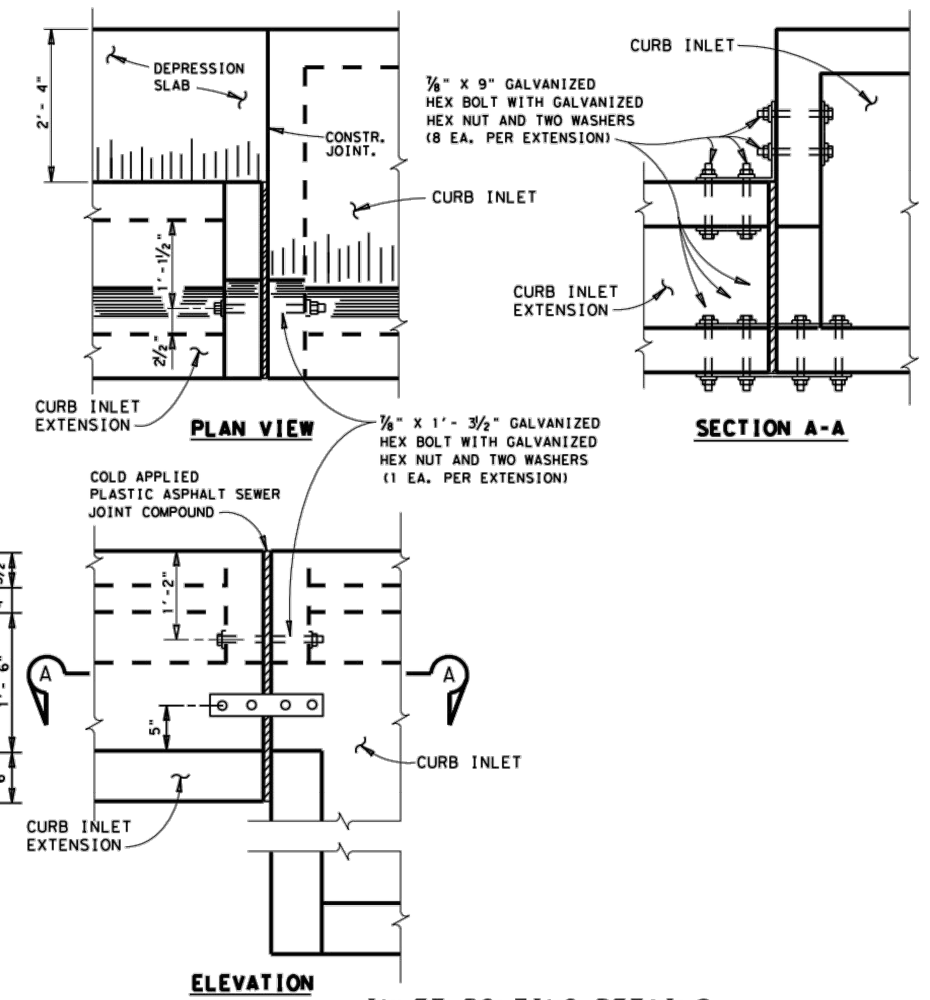

INLET BOLTING DETAILS
(SHOWING CURB INLET TO EXTENSION)

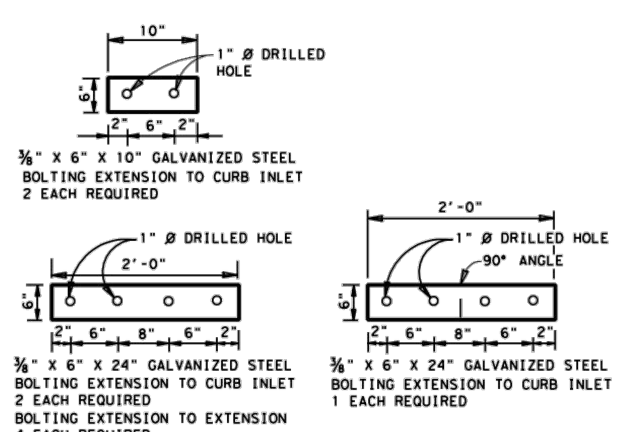

PLATES

REINFORCING STEEL					
ESTIMATED QUANTITIES - (EXTENSION)					
BAR	NO.	SIZE	SPAC	LENGTH	WEIGHT
A	29	#4	5"	9'-8"	187
B	5	#5	3"	11'-5"	60
C	20	#5	6"	2'-11"	61
F	12	#4	11"	14'-1"	113
G	4	#4	11"	1'-11"	5
H	6	#4	11"	2'-2"	9
P	4	#5	-	2'-2"	9
M	3	#4	10"	11'-5"	23
D	2	#5	-	5'-0"	11
TOTAL - REINF. STEEL - LBS.					478 *
TOTAL - CLASS "C" CONC. - CY.					3.55 *
TOTAL - CLASS "C" CONC. - CY. DEPRESSION SLAB					0.80 *

* FOR CONTRACTOR'S INFORMATION ONLY. NO DEDUCTION MADE FOR PIPES. QUANTITIES SHOWN ARE FOR "H" = 4'-10". "H" MAY VARY

NOTES:
WHEN INLET EXTENSIONS ARE REQUIRED FOR ON GRADE INLETS THE EXTENSION(S) SHALL BE PLACED ON THE UPSTREAM END OF THE INLET.
FOR CURB INLET EXTENSION REINFORCING STEEL, NOTES & VARIOUS OTHER APPLICABLE DETAILS NOT FOUND ON THIS SHEET, REFER TO SHEET 1.

SAN ANTONIO DISTRICT STANDARD
CURB INLET EXTENSION
TYPE C-E

© 1999 Texas Department of Transportation
SHEET 2 OF 2

FED. RD. DIV. NO.	PROJECT NO.		SHEET NO.
6			
STATE	STATE DISTRICT	COUNTY	
TEXAS	SAT		
CONT.	SECT.	JOB	HIGHWAY NO.

8/01

T:/ENGDATA/STANDARDS/CURBINCE.DGN

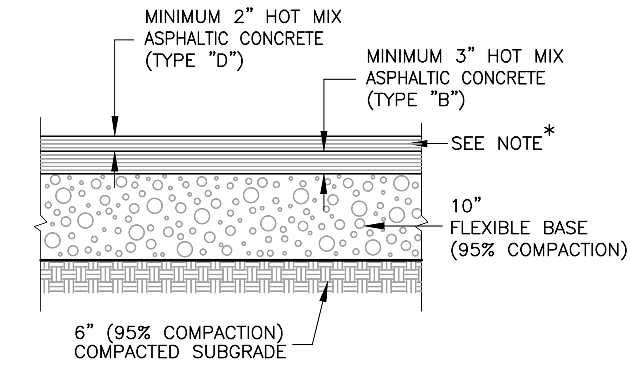

DETAIL OF PAVEMENT
(N.T.S.)

NOTE: * 1. PRIME COAT 0.2 GAL. PER S.Y. OVER COMPACTED BASE TACK COAT 0.1 GAL. PER S.Y. OVER PRIME COAT

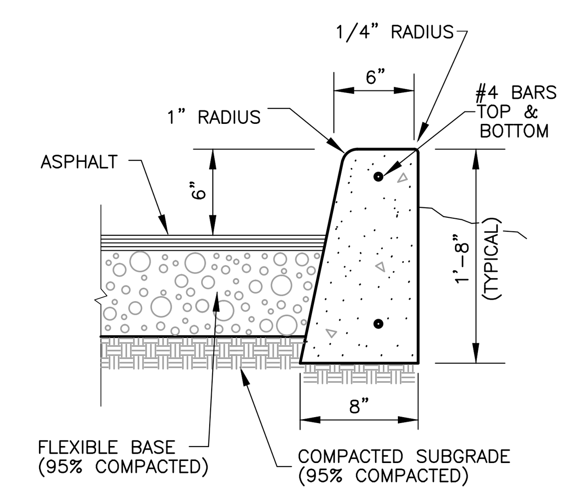

CURB DETAIL
(N.T.S.)

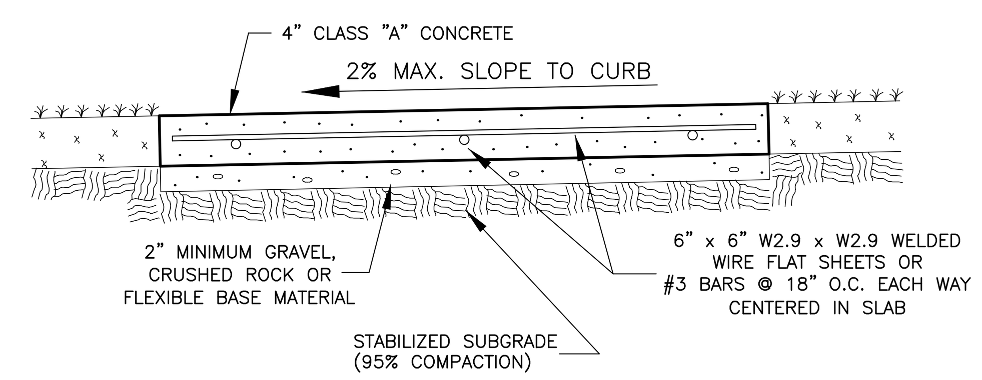

CONCRETE SIDEWALK SECTION
(N.T.S.)

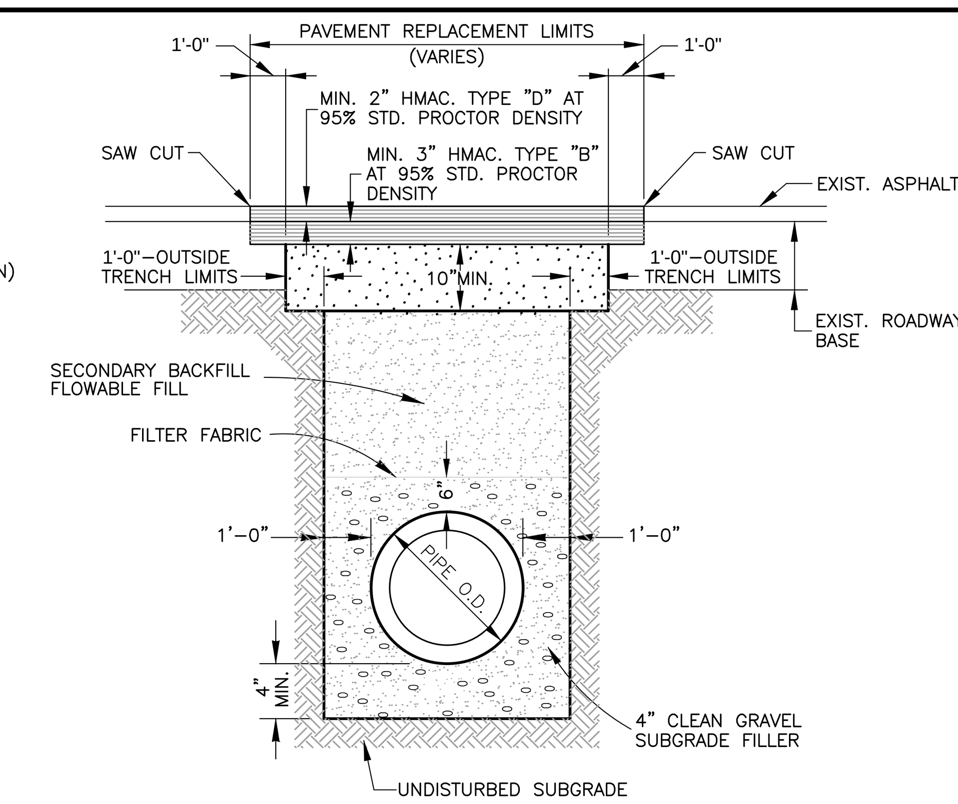

ASPHALT TRENCH & PAVING REPAIR
(N.T.S.)

GENERAL NOTES

1. ALL UTILITY LOCATIONS SHOWN ARE APPROXIMATE ONLY. IT IS THE RESPONSIBILITY OF THE CONTRACTOR TO LOCATE ALL THE EXISTING UNDERGROUND UTILITIES PRIOR TO ANY EXCAVATION. ANY DAMAGE TO UTILITIES WILL BE CONTRACTORS RESPONSIBILITY.
2. ALL CONSTRUCTION METHODS AND MATERIALS IF NOT SHOWN SHALL BE PER STANDARD SPECIFICATIONS OF THE CITY OF LEON VALLEY.
3. CONTRACTOR IS TO OBTAIN ALL NECESSARY PERMITS.
4. CONTRACTOR WILL BE REQUIRED TO PROVIDE ENGINEER WITH TEST RESULTS FOR TWO EACH PASSING DENSITY CHECKS FOR SUBGRADE AND FLEXIBLE BASE TO INCLUDE PROCTOR CURVE DATA FROM A TESTING LABORATORY APPROVED BY THE ENGINEER.
5. PROVIDE A MINIMUM OF 2" CONCRETE COVER OVER ALL REINFORCING.
6. PROVIDE EXPANSION JOINTS FOR CONCRETE CURBS, SIDEWALKS AND CONCRETE PAVEMENT. CUT TO SHAPE EVERY 40' AND AT ANGLE POINTS AND RETURNS.
7. ALL REINFORCING STEEL SHALL BE CONTINUOUS WITH SPLICES LAPPED 40 DIAMETERS. GRADE 60 KSI.
8. ALL CONCRETE SHALL HAVE A MINIMUM COMPRESSIVE STRENGTH OF 3000 P.S.I. @ 28 DAYS, UNLESS OTHERWISE NOTED.
9. CONTRACTOR TO SECURE TEXAS POLLUTANT DISCHARGE ELIMINATION SYSTEM (TPDES) STORMWATER CONSTRUCTION PERMIT FROM TCEQ.
10. CONTRACTOR TO CONTACT UTILITY LOCATOR AT 811. AT THE CITY OF LEON VALLEY 210–681–1850.
11. SIDEWALK CROSS SLOPE NOT TO EXCEED 2%.
12. PAVING TO BE REMOVED WILL BE SAWCUT ON A CLEAN LINE. ANY SUBCONTRACTOR WHO DAMAGES PAVING NOT DESIGNATED FOR REMOVAL SHALL PATCH AND REPAIR DAMAGED AREAS.
13. CONTRACTOR SHALL PROTECT ALL EXISTING MAILBOXES, UTILITIES, SPRINKLER SYSTEMS, AND METER/BOXES. ANY ADJUSTMENTS WILL BE INCIDENTAL (AND N.S.P.I.).

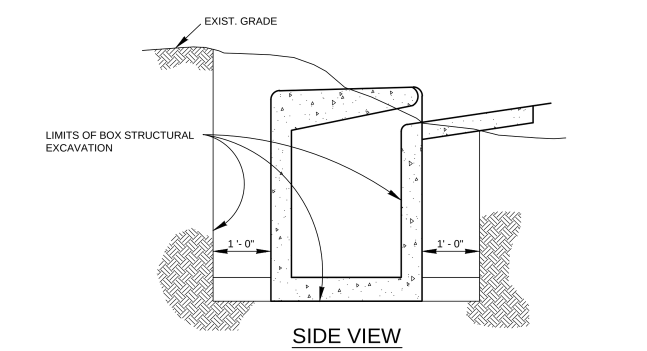

SIDE VIEW

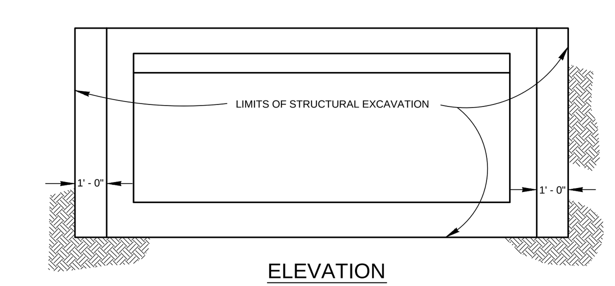

ELEVATION

COST OF STRUCTURAL EXCAVATION TO BE INCLUDED WITH UNIT BID PRICE FOR INLETS - ITEM 403.

STRUCTURAL EXCAVATIONS AT DRAINAGE INLETS
NO SCALE

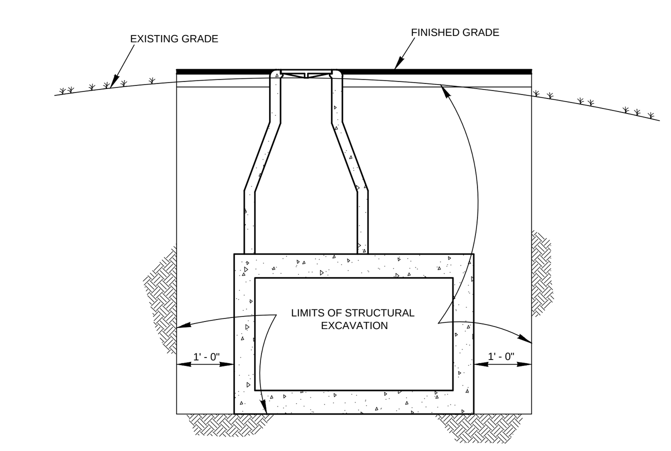

COST OF STRUCTURAL EXCAVATION TO BE INCLUDED WITH UNIT BID PRICE FOR JUNCTION BOX - ITEM 403.

STRUCTURAL EXCAVATION AT JUNCTION BOXES
NO SCALE

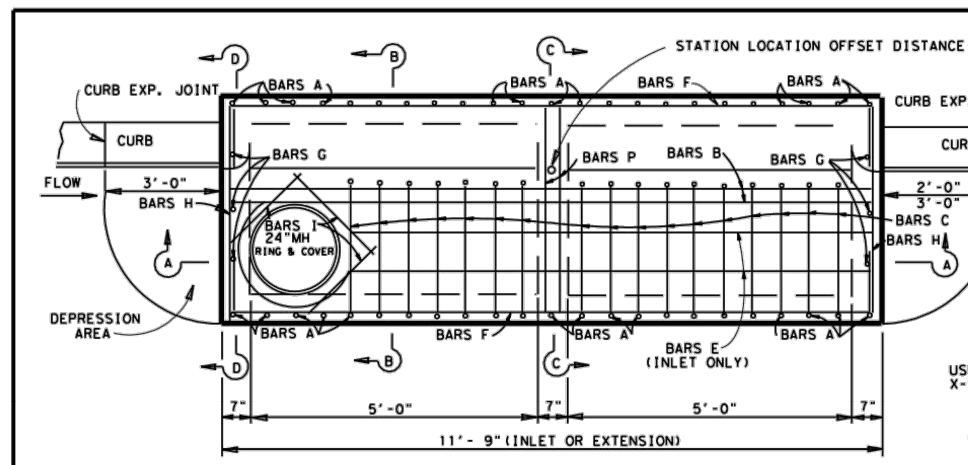

PLAN
(INLET OR EXTENSION)

NOTE: RING & COVER SHOWN ABOVE IS TO BE PLACED IN INLET ONLY. FOR EXTENSION, CONTINUE REINF. STEEL THRU THIS AREA.

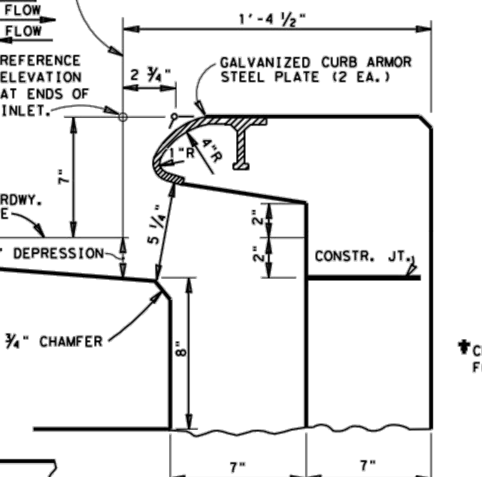

THROAT DETAIL

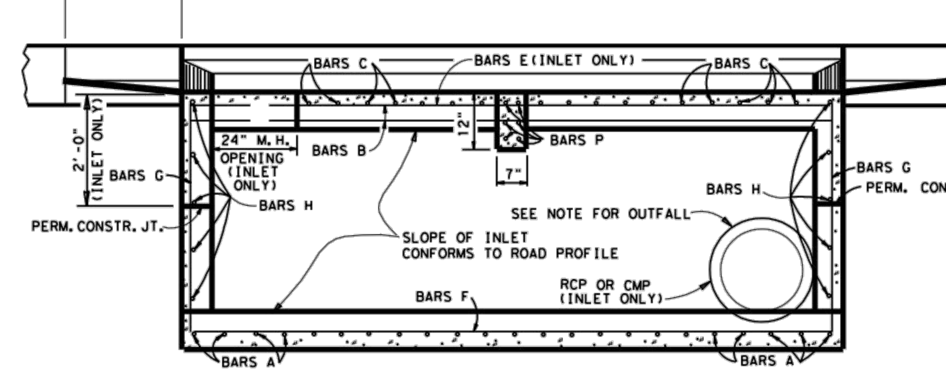

SECTION A-A

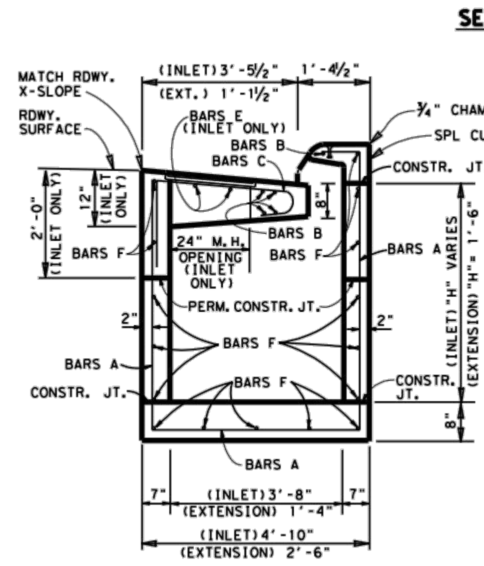

SECTION B-B

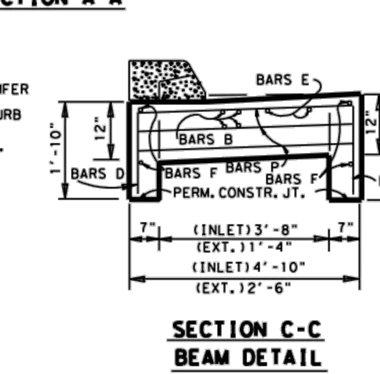

SECTION C-C BEAM DETAIL

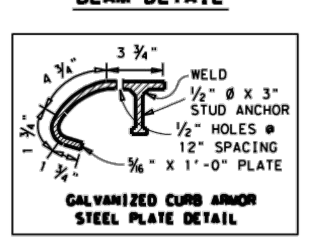

GALVANIZED CURB ARMOR STEEL PLATE DETAIL

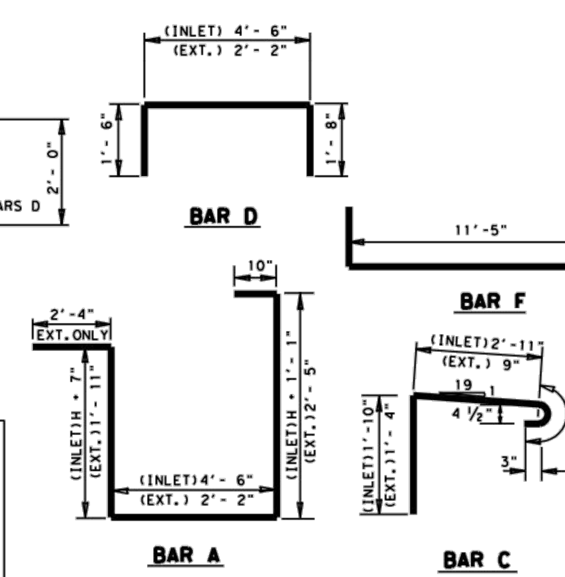

BAR DETAILS

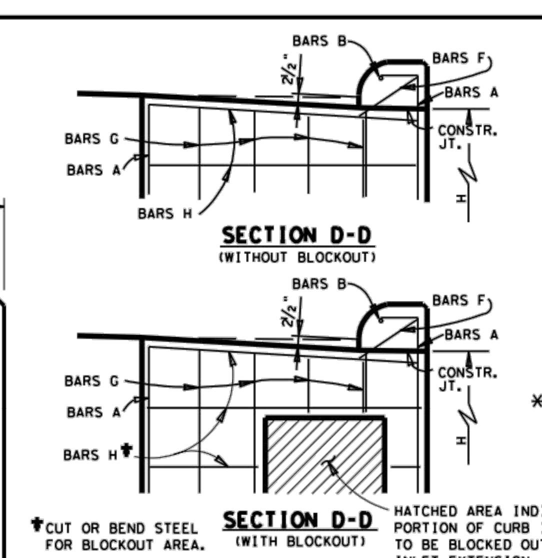

✝CUT OR BEND STEEL FOR BLOCKOUT AREA.

HATCHED AREA INDICATES PORTION OF CURB INLET WALL TO BE BLOCKED OUT FOR CURB INLET EXTENSION.

REINFORCING STEEL					
ESTIMATED QUANTITIES - FOR "H" = 4'-10"					
BAR	NO.	SIZE	SPAC	LENGTH	WEIGHT
A	29	#4	5"	16'-8"	323
B	5	#5	3"	11'-5"	60
C	17	#5	6"	5'-7"	99
D	2	#5	—	7'-8"	16
E	2	#4	8"	9'-5"	13
F	17	#4	11"	14'-1"	160
G	6	#4	11"	4'-11"	20
H	10	#4	11"	4'-4"	29
I	3	#4	-	2'-4"	5
P	6	#5	-	4'-4"	27
TOTAL - REINF. STEEL - LBS.					752 *
TOTAL - CLASS "C" CONC. - CY.					5.60 *

* FOR CONTRACTOR'S INFORMATION ONLY. NO DEDUCTION MADE FOR PIPES. QUANTITIES SHOWN ARE FOR "H" = 4'-10". "H" MAY VARY

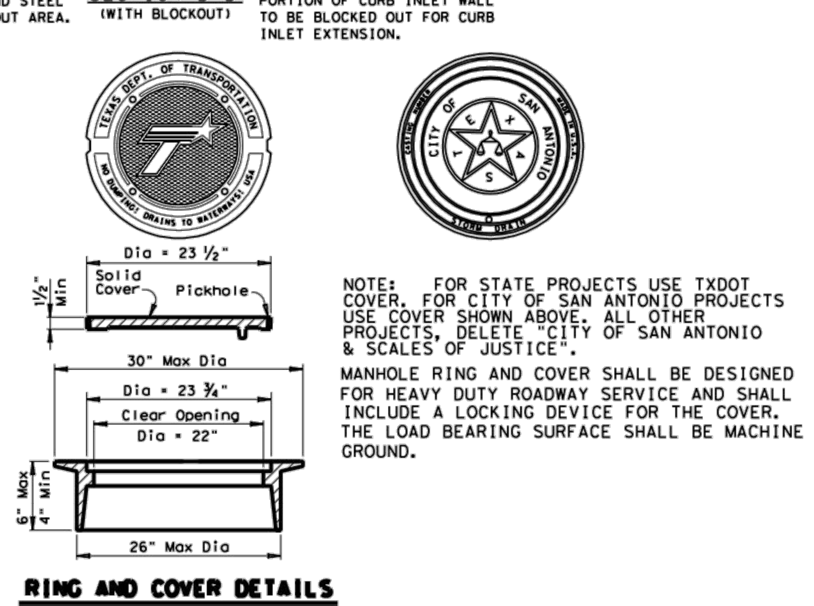

NOTE: FOR STATE PROJECTS USE TXDOT COVER. FOR CITY OF SAN ANTONIO PROJECTS USE COVER SHOWN ABOVE. ALL OTHER PROJECTS, DELETE "CITY OF SAN ANTONIO & SCALES OF JUSTICE".
MANHOLE RING AND COVER SHALL BE DESIGNED FOR HEAVY DUTY ROADWAY SERVICE AND SHALL INCLUDE A LOCKING DEVICE FOR THE COVER. THE LOAD BEARING SURFACE SHALL BE MACHINE GROUND.

RING AND COVER DETAILS
Approximate Weight = 255 lb

GENERAL NOTES:
CURB MUST BE CAST-IN-PLACE FROM BEGIN GUTTER TRANSITION TO END GUTTER TRANSITION INCLUDING OVER INLET.
OUTFALL PIPES WHICH LAY TRANSVERSE TO ROADWAY, AT INLETS ON GRADE, WILL BE PLACED AT LOW END OF INLET. OTHER PIPES MAY BE PLACED ON ANY SIDE OF INLET.
ALL EXPOSED CORNERS SHALL HAVE A 3/4" CHAMFER.
FOR REINFORCING STEEL AND CONCRETE QUANTITIES FOR THE EXTENSION, SEE SHEET 2 OF 2.
IF THE ROADWAY CURB HEIGHT DOES NOT MATCH THE TOP OF THE INLET, TRANSITION THE ROADWAY CURB AT 40:1
PAYMENT FOR CONC., REINF. STEEL, M H RING & COVER, CURB ARMOR AND STEPS SHALL BE INCLUDED IN UNIT COST OF ITEM 465 "MANHOLE & INLETS".

SAN ANTONIO DISTRICT STANDARD
CURB INLET TYPE C WITH INLET EXTENSION TYPE C-E

© 1999 Texas Department of Transportation
SHEET 1 OF 2

FED. RD. DIV. NO.	PROJECT NO.		SHEET NO.
6			
STATE	STATE DISTRICT	COUNTY	
TEXAS	SAT		
CONT.	SECT.	JOB	HIGHWAY NO.

3/01

STRUCTURE DESIGN /BRIDGE/STDS/CURBINCE.DGN

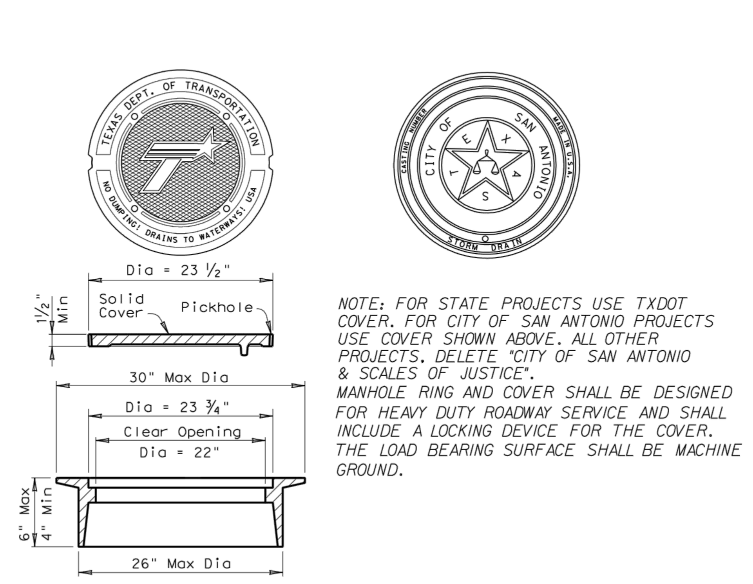

NOTE: FOR STATE PROJECTS USE TXDOT COVER. FOR CITY OF SAN ANTONIO PROJECTS USE COVER SHOWN ABOVE. ALL OTHER PROJECTS, DELETE "CITY OF SAN ANTONIO & SCALES OF JUSTICE".
MANHOLE RING AND COVER SHALL BE DESIGNED FOR HEAVY DUTY ROADWAY SERVICE AND SHALL INCLUDE A LOCKING DEVICE FOR THE COVER. THE LOAD BEARING SURFACE SHALL BE MACHINE GROUND.

RING AND COVER DETAILS
Approximate Weight = 255 lb

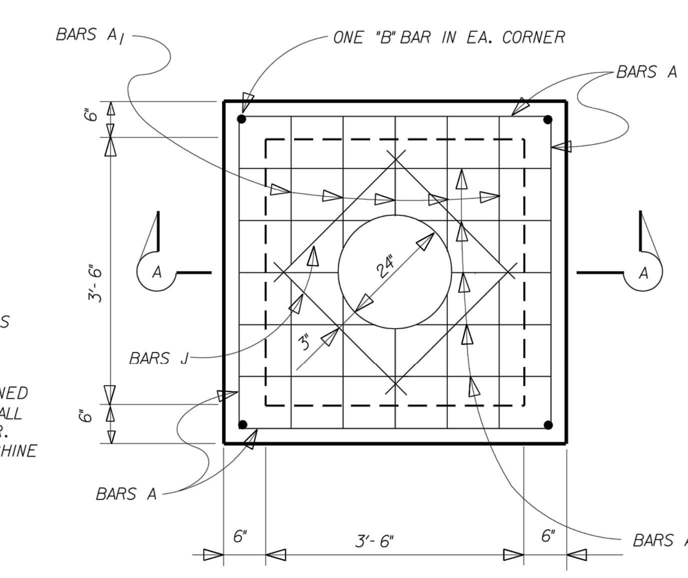

PLAN
TOP SLAB

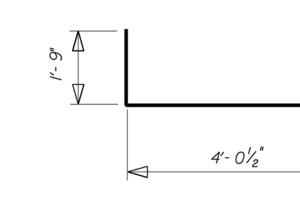

BARS A

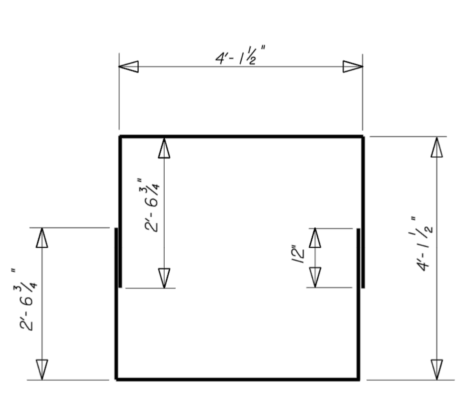

BARS C
SHOWING TWO BARS C, AT EACH LOCATION

ESTIMATED QUANTITIES FOR "H" = 4'- 6"					
REINFORCING STEEL					
BAR	No.	SIZE	SPACE	LENGTH	WEIGHT
A	18	4	8" ±	7'- 6 1/2"	79
A1	10	4	8" ±	4'- 0 1/2"	27
B	4	4	AS SHOWN	5'- 7"	15
B1	20	4	8" ±	4'- 7"	61
C	12	4	9" ±	18'- 6"	148
J	4	4	AS SHOWN	2'- 2"	6
TOTAL REINFORCING STEEL					336 Lbs.*
CL A CONCRETE					2.10 C.Y.*

* FOR CONTRACTOR'S INFORMATION ONLY. QUANTITIES VARY WITH "H". SEE INLET & MANHOLE SUMMARY SHEETS FOR "H".

GENERAL NOTES:
1. ALL BARS INTERCEPTING THE RING & COVER OPENING AND PIPE OPENINGS SHALL BE FIELD CUT.
2. CONCRETE SHALL BE CLASS "A".
3. ALL DIMENSIONS RELATING TO REINFORCING STEEL ARE TO CENTER OF BARS.
4. ALL EXPOSED CORNERS SHALL HAVE 3/4" CHAMFER.
5. PAYMENT FOR THE RING & COVER SHALL BE INCLUDED IN UNIT COST OF ITEM 465 "MANHOLES & INLETS."

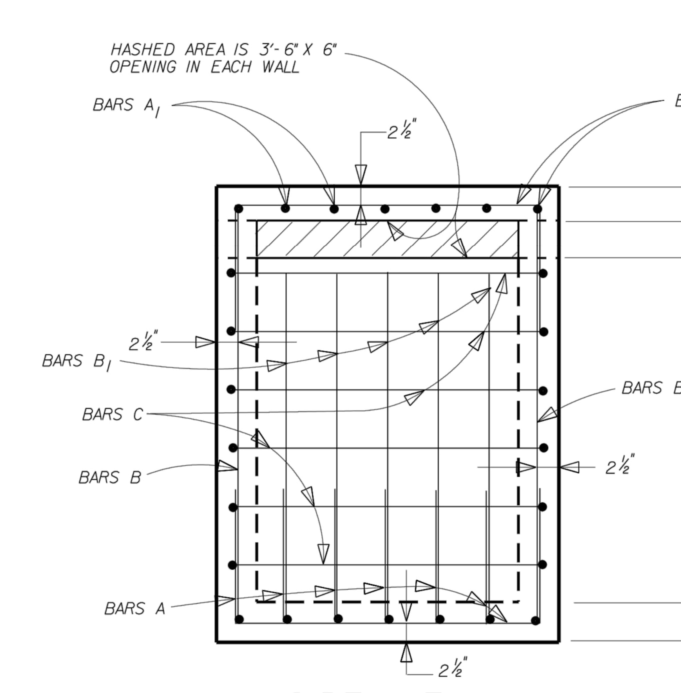

SIDE VIEW
WALL

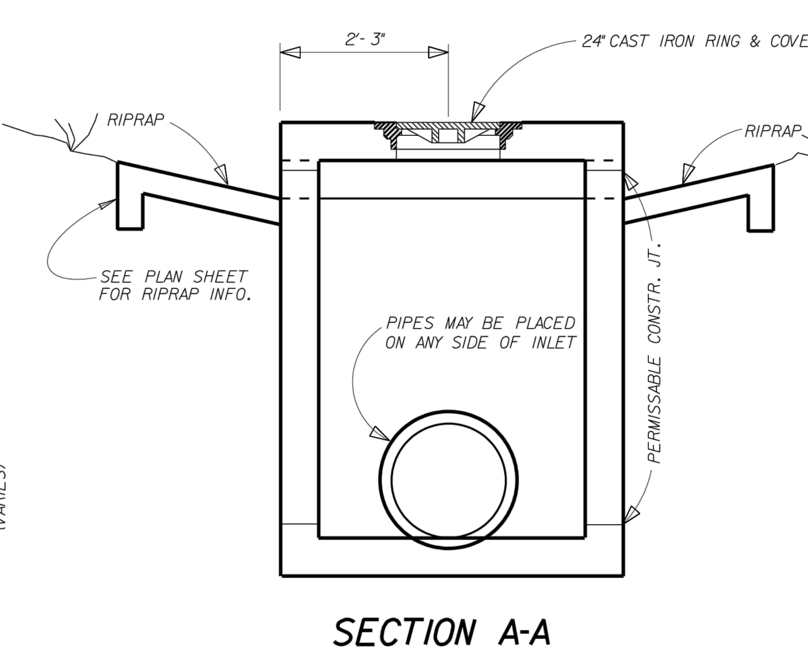

SECTION A-A

DROP INLET
TYPE 1 (4-WAY)

© 1998 Texas Department of Transportation

SAN ANTONIO DISTRICT STANDARD

FED. ROAD DIV. NO.	STATE	PROJECT NO.				SHEET NO.
6	TEXAS					
STATE DIST. NO.	COUNTY		CONT. NO.	SEC. NO.	JOB NO.	HIGHWAY NO.
15						

10/95

STRUCTURE DESIGN /BRIDGE/STDS/4wayInl.dgn

F-1892
SIA ENGINEERING, INC.
6977 SAN PEDRO AVE.
SAN ANTONIO, TEXAS 78216-6245
(210) 341-5500 FAX (210) 308-0662

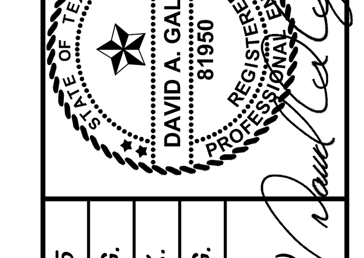

DATE:	JAN. 21, 2015
DESIGNED BY:	D.A.G.
DRAWN BY:	K.F.K.
CHECKED BY:	D.A.G.
SCALE: HOR.:	(AS SHOWN)

DETAILS

TIMBERHILL & HUEBNER
CITY OF LEON VALLEY
BEXAR COUNTY, TEXAS

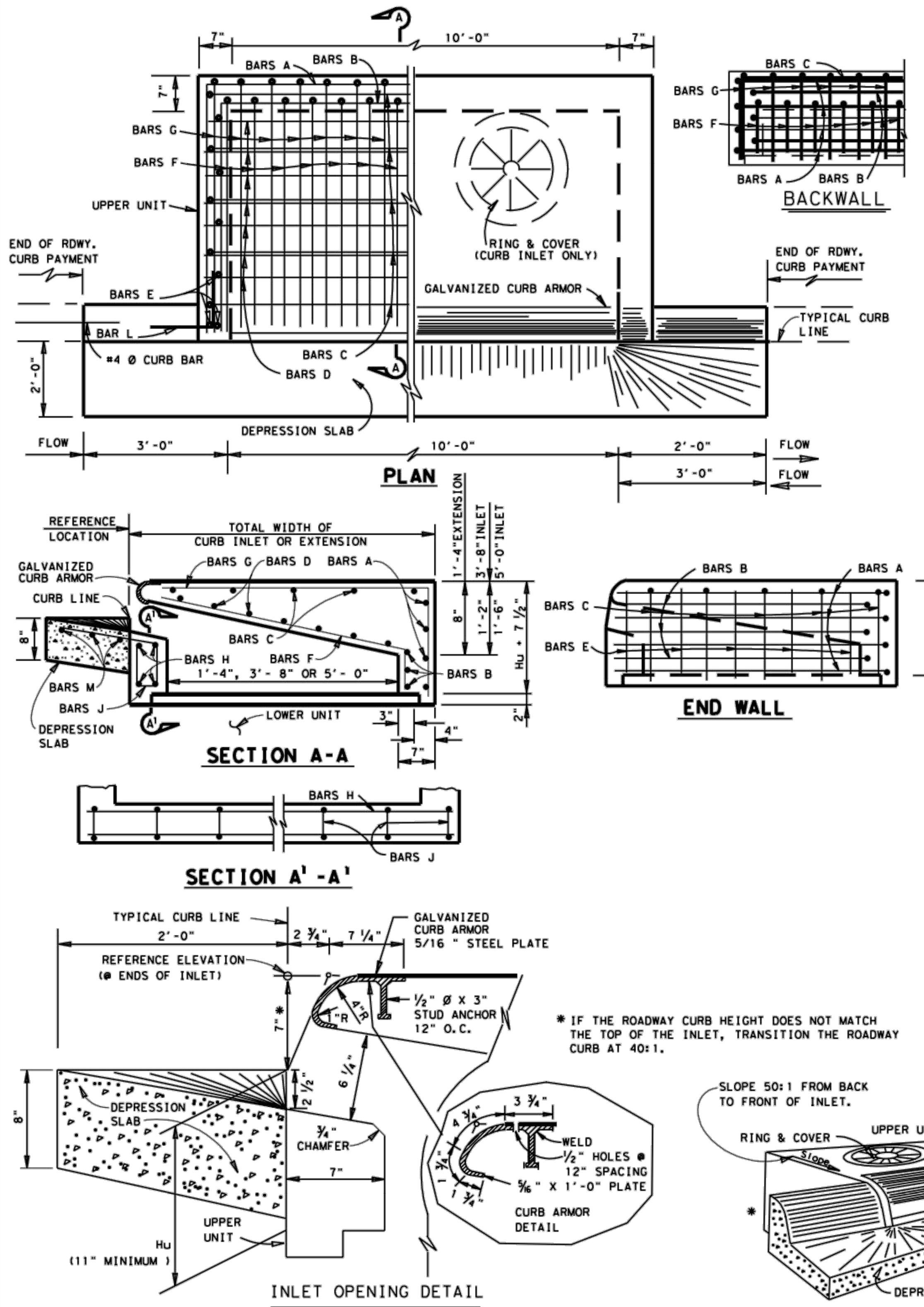

PLAN

SECTION A-A

END WALL

SECTION A' -A'

BACKWALL

INLET OPENING DETAIL

* IF THE ROADWAY CURB HEIGHT DOES NOT MATCH THE TOP OF THE INLET, TRANSITION THE ROADWAY CURB AT 40:1.

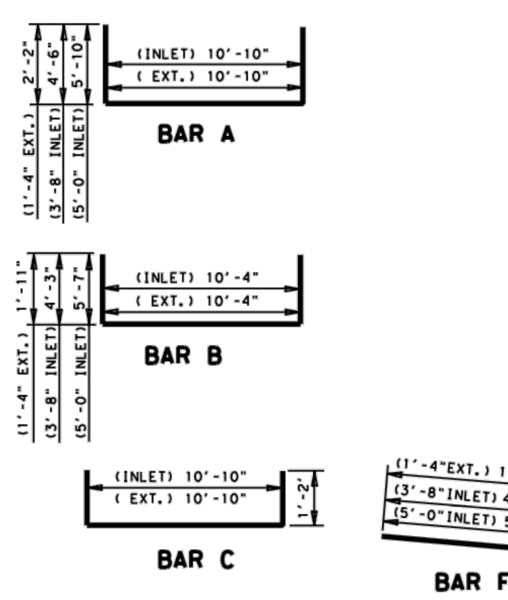

BAR A

BAR B

BAR C

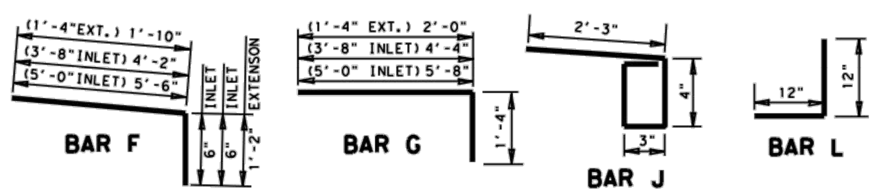

BAR F

BAR G

BAR J

BAR L

REINFORCING STEEL (FOR Hu = 11")

UPPER UNIT 10' X 3'-8' (TY. I)					
BAR	NO.	SIZE	SPAC.	LENGTH	WEIGHT
A	4	#4	—	19'-10"	53
B	3	#4	—	18'-10"	38
C	5	#4	11"	13'-2"	44
D	7	#4	6"	10'-10"	51
E	12	#4	11"	1'-2"	9
F	21	#6	6"	4'-8"	147
G	22	#6	6"	5'-8"	187
H	4	#4	—	10'-10"	29
J	12	#4	12"	3'-6"	28
L	4	#4	—	2'-0"	5
M	3	#4	—	14'-8"	29
TOTAL WEIGHT				LBS.	620

UPPER UNIT 10' X 5' (TY. II)					
BAR	NO.	SIZE	SPAC.	LENGTH	WEIGHT
A	4	#4	—	22'-6"	60
B	3	#4	—	21'-6"	43
C	7	#4	11"	13'-2"	62
D	11	#4	6"	10'-10"	80
E	16	#4	11"	1'-2"	13
F	21	#6	6"	5'-8"	179
G	22	#6	6"	7'-0"	231
H	4	#4	—	10'-10"	29
J	12	#4	12"	3'-6"	28
L	4	#4	—	2'-0"	5
M	3	#4	—	14'-8"	29
TOTAL WEIGHT				LBS.	759

CL "A" CONCRETE QUANTITIES (FOR Hu = 11")

DEPRESSION SLAB	C.Y.
10' INLET	0.7
10' EXTENSION	0.7

UPPER UNIT (ONLY)	C.Y.
10' X 3'-8" CURB INLET	1.9
10' X 5'-0" CURB INLET	2.7
10' EXTENSION	1.0

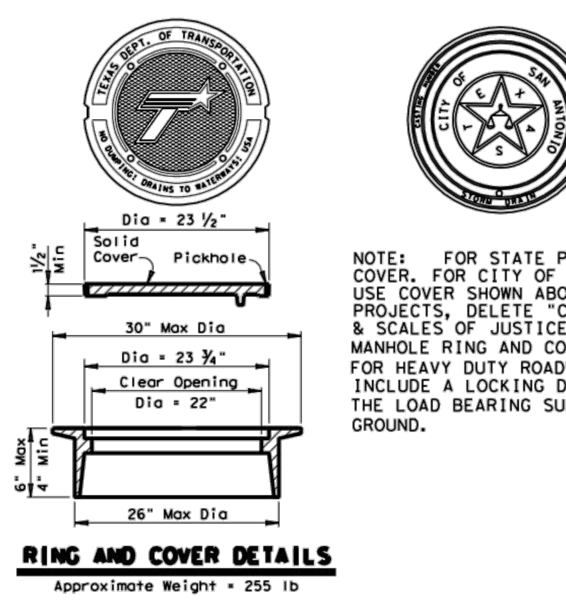

RING AND COVER DETAILS

Approximate Weight = 255 lb

NOTE: FOR STATE PROJECTS USE TXDOT COVER. FOR CITY OF SAN ANTONIO PROJECTS USE COVER SHOWN ABOVE. ALL OTHER PROJECTS, DELETE "CITY OF SAN ANTONIO & SCALES OF JUSTICE". MANHOLE RING AND COVER SHALL BE DESIGNED FOR HEAVY DUTY ROADWAY SERVICE AND SHALL INCLUDE A LOCKING DEVICE FOR THE COVER. THE LOAD BEARING SURFACE SHALL BE MACHINE GROUND.

SEE SHEET 1 OF 3 FOR GENERAL NOTES.

SAN ANTONIO DISTRICT STANDARD

CURB INLET
TYPE I & II WITH
INLET EXTENSION I/II-E

©1999 Texas Department of Transportation

SHEET 2 OF 3

FED. RD. DIV. NO.	PROJECT NO.		SHEET NO.
6			
STATE	STATE DISTRICT	COUNTY	
TEXAS	SAT		
CONT.	SECT.	JOB	HIGHWAY NO.

3/01

STRUCTURE DESIGN /BRIDGE/STDS/CURBINEXT.DGN

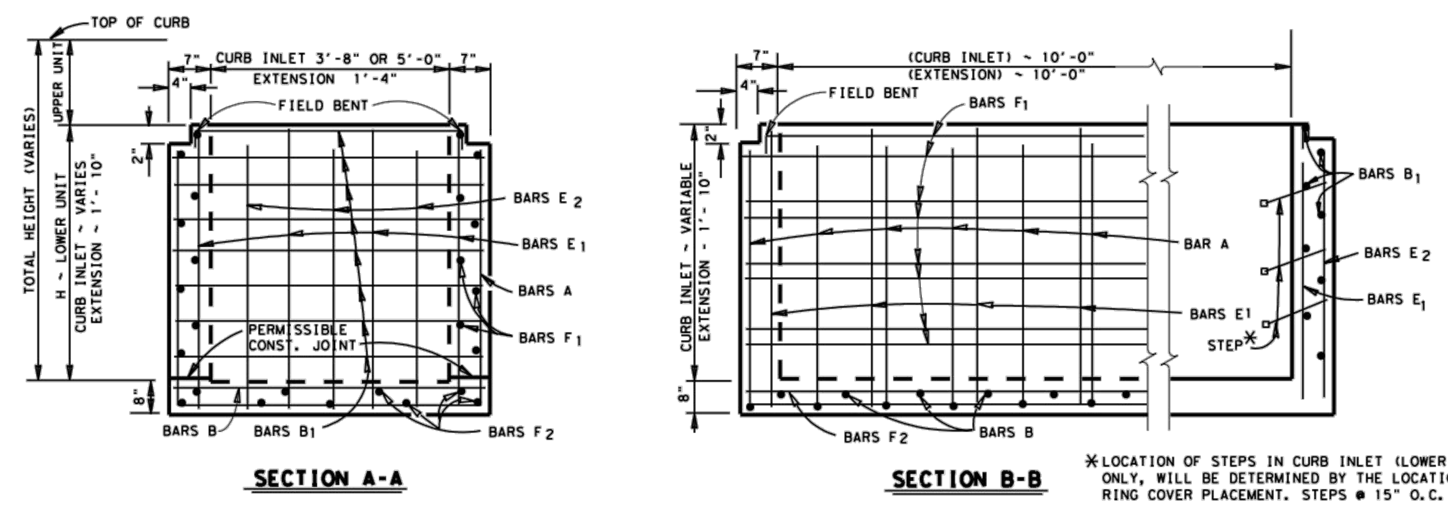

SECTION A-A

SECTION B-B

✻ LOCATION OF STEPS IN CURB INLET (LOWER UNIT) ONLY, WILL BE DETERMINED BY THE LOCATION OF RING COVER PLACEMENT. STEPS @ 15" O.C.

REINFORCING STEEL

LOWER UNIT 10' X 3'-8" (TY. I)				
BAR	NO.	SIZE	SPAC.	LENGTH
A	12	#4	12"	VARIES
B	11	#4	12"	4'-6"
B_1	VARIES	#4	12"	4'-6"
E_1	20	#4	18"±	VARIES
E_2	6	#4	18"±	VARIES
F_1	VARIES	#4	12"±	10'-10"
F_2	9	#4	—	10'-10"

LOWER UNIT 10' X 5'-0" (TY. II)				
BAR	NO.	SIZE	SPAC.	LENGTH
A	12	#4	12"	VARIES
B	11	#4	12"	5'-10"
B_1	VARIES	#4	12"	5'-10"
E_1	22	#4	18"±	VARIES
E_2	8	#4	18"±	VARIES
F_1	VARIES	#4	12"±	10'-10"
F_2	11	#4	—	10'-10"

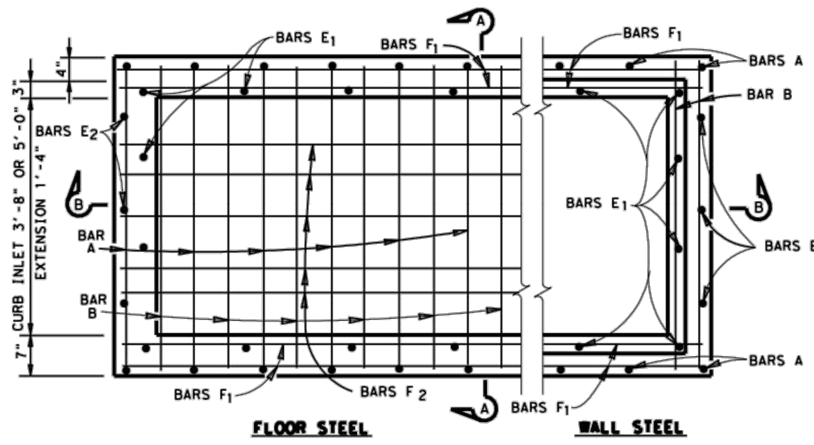

FLOOR STEEL

WALL STEEL

PLAN

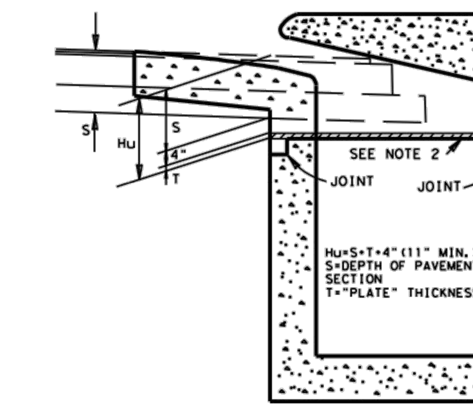

PHASE CONSTRUCTION

NOTES FOR PHASE CONSTRUCTION: (WHEN DIRECTED BY THE ENGINEER)

1. THE CURB INLET AND EXTENSION SHALL BE CONSTRUCTED TO A DEPTH "Hu" BELOW THE INLET AND EXTENSION GUTTER LINE ELEVATION.
2. CAP THE CURB INLET AND EXTENSION WITH A STEEL PLATE APPROVED BY THE ENGINEER AND CONSTRUCT THE ROADWAY OVER THE PLATE.
3. AFTER THE ROADWAY IS COMPLETED BUT PRIOR TO THE FINAL ACP, SAW CUT THE PAVEMENT, REMOVE THE PLATE AND COMPLETE THE UPPER PORTION OF THE CURB INLET AND/OR EXTENSION.

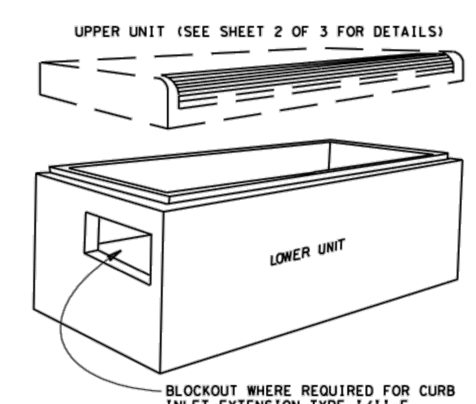

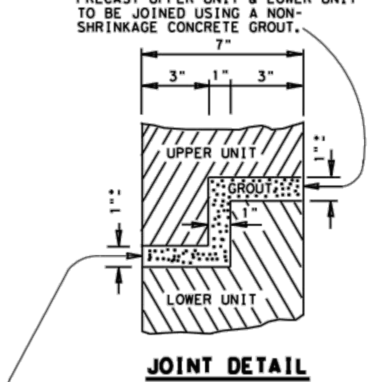

JOINT DETAIL

WHEN USING PRECAST UPPER UNIT, THIS SPACE IS FOR MAKING MINOR HORIZONTAL AND VERTICAL ADJUSTMENTS TO ACCOMODATE A FIT BETWEEN THE UPPER AND LOWER UNIT THAT ALLOWS FOR A MATCH LINE AND GRADE BETWEEN THE ROADWAY CURB AND THE UPPER UNIT OF THE INLET.

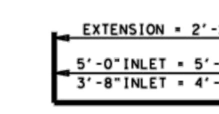

BARS A (LOWER UNIT)

GENERAL NOTES:

QUANTITIES SHOWN ARE FOR CONTRACTORS INFORMATION ONLY.
ALL DIMENSIONS RELATING TO REINFORCING STEEL ARE TO CENTER OF BARS.
ALL REINFORCING STEEL SHALL HAVE A MINIMUM COVER OF 1½".
ALL EXPOSED CORNERS SHALL BE CHAMFERED ¾".
DEPRESSION SLAB SHALL RECEIVE A WOOD FLOAT FINISH.
FACE OF INLET TO CONFORM TO FACE OF CURB LINE.
ALL BARS INTERCEPTING MANHOLE RING & COVER SHALL BE CUT OR BENT.
PAYMENT FOR CONC., REINF. STEEL, M H RING & COVER, CURB ARMOR AND STEPS SHALL BE INCLUDED IN UNIT COST OF ITEM 465 "MANHOLE & INLETS".
RING & COVER LOCATION WILL BE AS DIRECTED/APPROVED BY THE ENGINEER.
GALVANIZED BOLTS, NUTS, WASHERS, PLATES AND GASKETS ARE SUBSIDIARY TO INLETS.
THE CONTRACTOR SHALL PROVIDE AN ADEQUATE MEANS TO LIFT AND PLACE THE INLETS, WHEN USING PRECAST UNITS.
ALL BARS AT PIPE BLOCKOUT LOCATIONS SHALL BE CUT OR BEND.
ALL LOWER UNITS SHALL RECEIVE INVERT MORTAR SHAPING.
PIPE BLOCKOUTS IN INLET WALLS SHOULD NOT EXCEED 3" BEYOND THE OUTER SHELL OF THE PIPE, TAKING INTO ACCOUNT THE SKEW OF THE PIPE AS NECESSARY.
CONSTRUCTION JOINT MAY BE RAISED A MAXIMUM OF 6"

SAN ANTONIO DISTRICT STANDARD

CURB INLET
TYPE I & II WITH
INLET EXTENSION I/II-E

©1999 Texas Department of Transportation

SHEET 1 OF 3

FED. RD. DIV. NO.	PROJECT NO.		SHEET NO.
6			
STATE	STATE DISTRICT	COUNTY	
TEXAS	SAT		
CONT.	SECT.	JOB	HIGHWAY NO.

3/01

STRUCTURE DESIGN /BRIDGE/STDS/CURBINEXT.DGN

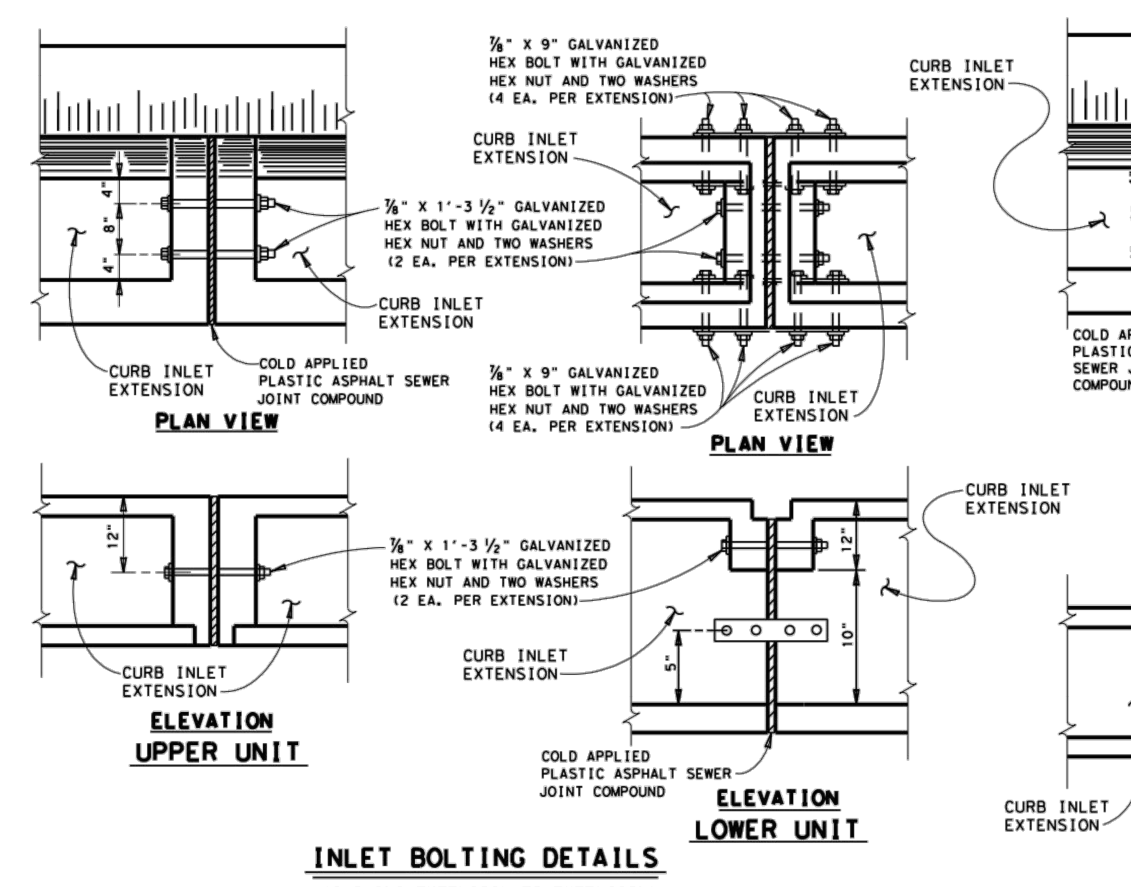

PLAN VIEW

ELEVATION UPPER UNIT

ELEVATION LOWER UNIT

INLET BOLTING DETAILS (SHOWING EXTENSION TO EXTENSION)

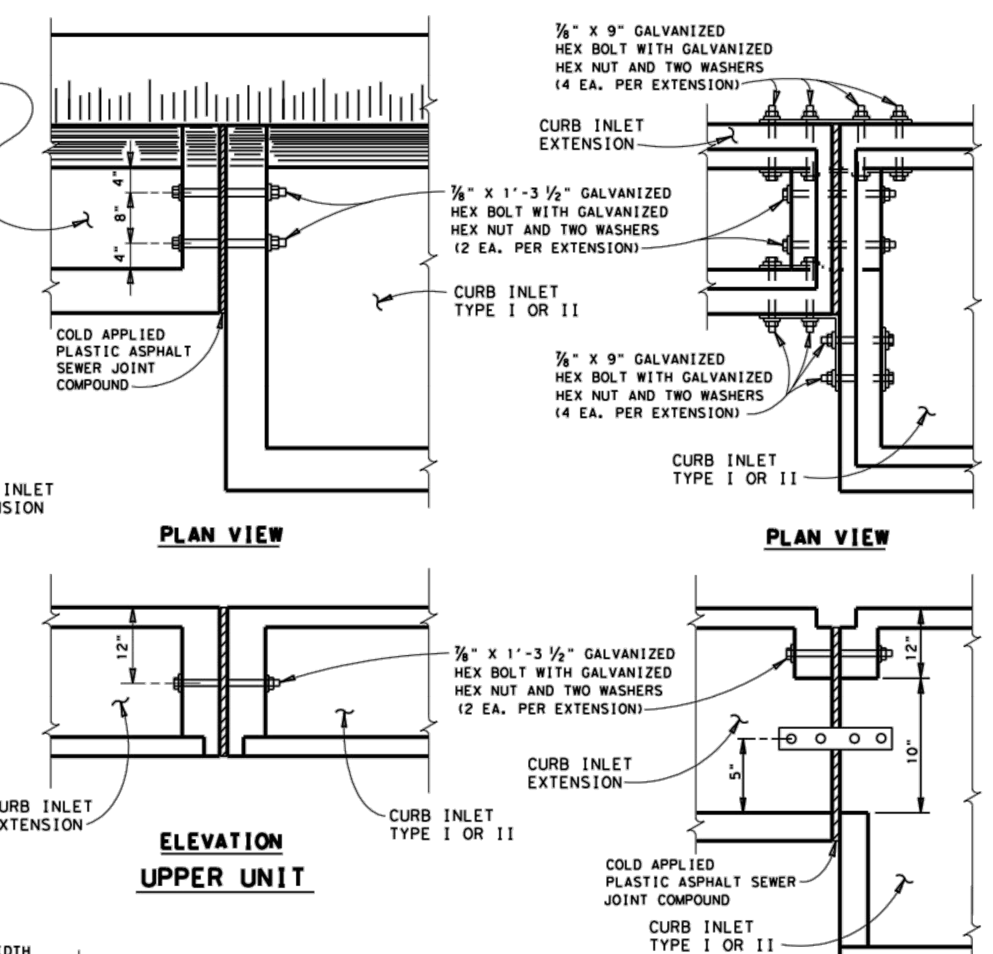

PLAN VIEW

ELEVATION UPPER UNIT

ELEVATION LOWER UNIT

INLET BOLTING DETAILS (SHOWING CURB INLET TO EXTENSION)

UPPER UNIT EXTENSION (FOR Hu = 11")					
BAR	NO.	SIZE	SPAC.	LENGTH	WEIGHT
A	4	#4	—	15'-2"	41
B	3	#4	—	14'-2"	28
C	3	#4	11"	13'-2"	26
D	3	#4	6"	10'-10"	22
E	8	#4	11"	1'-2"	6
F	21	#6	6"	2'-0"	63
G	22	#6	6"	3'-4"	110
H	4	#4	—	10'-10"	29
J	12	#4	12"	3'-6"	28
L	4	#4	—	2'-0"	5
M	3	#4	—	14'-8"	29
REINFORCING STEEL				LBS.	387
CL. "A" CONC.				C.Y.	1.0

LOWER UNIT EXTENSION					
BAR	NO.	SIZE	SPAC.	LENGTH	WEIGHT
A	12	#4	12"	6'-2"	49
B	11	#4	12"	2'-2"	16
B_1	3	#4	12"	2'-2"	4
E_1	18	#4	18"±	2'-3"	27
E_2	4	#4	18"±	2'-1"	6
F_1	16	#4	12"±	10'-10"	116
F_2	5	#4	—	10'-10"	36
REINFORCING STEEL				LBS.	254
CL. "A" CONC.				C.Y.	1.4

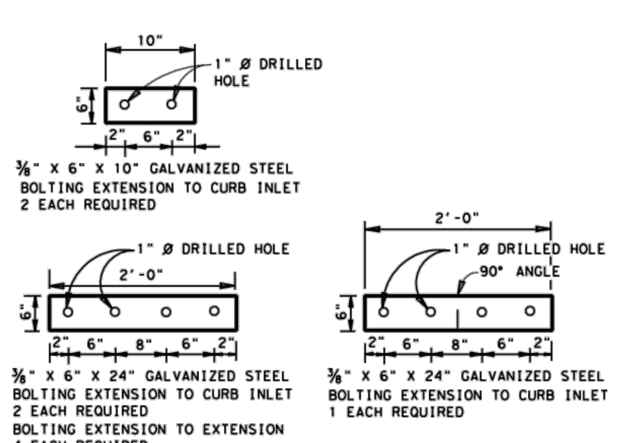

PLATES

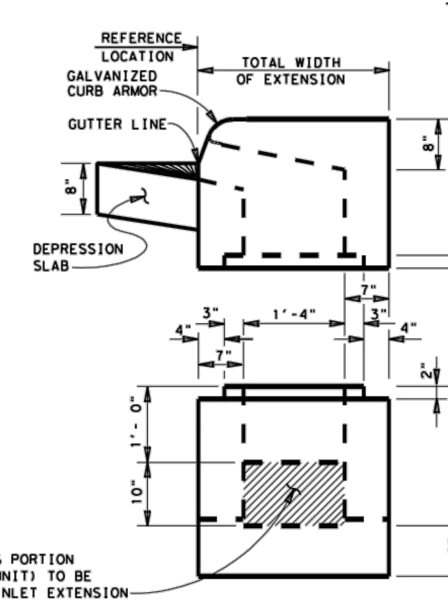

SECTION A-A CURB INLET EXTENSION TYPE E

NOTES:
WHEN INLET EXTENSIONS ARE REQUIRED FOR ON GRADE INLETS THE EXTENSION(S) SHALL BE PLACED ON THE UPSTREAM END OF THE INLET.
FOR CURB INLET EXTENSION REINFORCING STEEL, NOTES & VARIOUS OTHER APPLICABLE DETAILS NOT FOUND ON THIS SHEET, REFER TO SHEETS 1 & 2.

SAN ANTONIO DISTRICT STANDARD

CURB INLET EXTENSION
TYPE I/II-E

©1999 Texas Department of Transportation

SHEET 3 OF 3

FED. RD. DIV. NO.	PROJECT NO.		SHEET NO.
6			
STATE	STATE DISTRICT	COUNTY	
TEXAS	SAT		
CONT.	SECT.	JOB	HIGHWAY NO.

3/01

T:/ENGDATA/STANDARDS/CURBINEXT.DGN

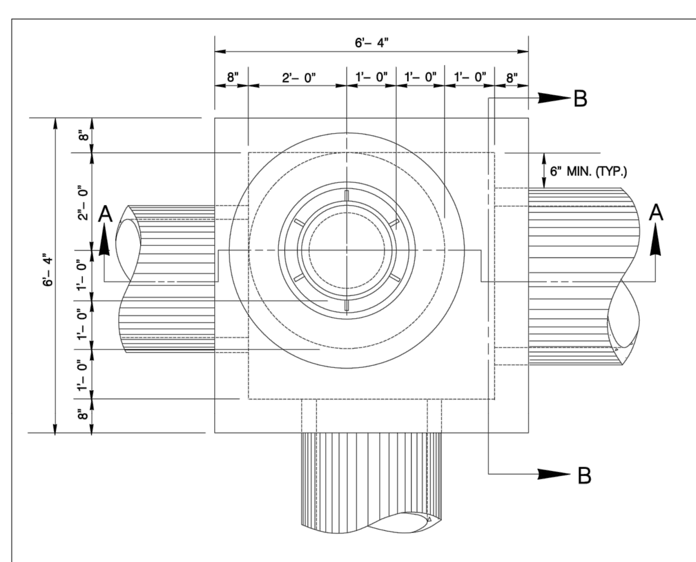

PLAN

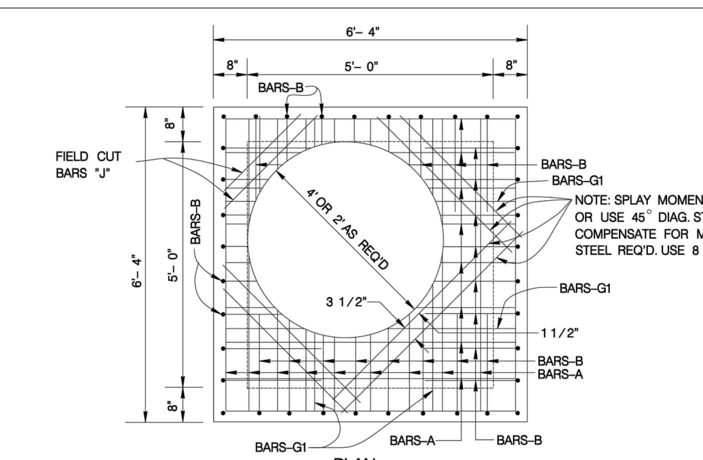

PLAN OF JUNCTION BOX TOP SLAB SHOWING STEEL

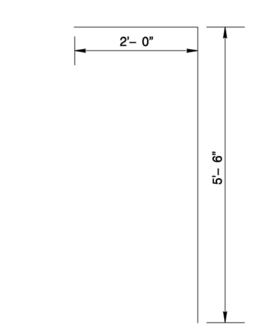

BARS–B

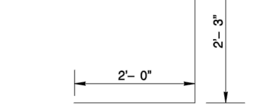

BARS–C

SCHEDULE FOR REINFORCING STEEL						
SHAPE	BAR	NO.	SIZE	SPACING	LENGTH	WEIGHT
STRAIGHT	A	18	4	9" O.C.	6'– 1"	73
⌈	B	36	5	8" O.C.	7'– 6"	282
⌊	C	36	5	8" O.C.	4'– 3"	160
STRAIGHT	D	18	4	9" O.C.	6'– 1"	73
STRAIGHT	E	20	3	12" O.C.	4'– 11"	37
STRAIGHT	G	20	4	12" O.C.	6'– 1"	81
STRAIGHT	G_1	8	4	AS SHOWN	6'– 1"	33
STRAIGHT	H	24	3	12" O.C.	5'– 5"	49
STRAIGHT	J	8	6	3 1/2" O.C.	4'– 11"	59
					TOTAL	847 lbs.

CLASS "A" CONCRETE – 5.03 CU. YDS. (DOES NOT EXCLUDE MANHOLE OPENINGS OR PIPE OPENING)

* NOTE: BAR SIZE AND SPACING BASED ON SPANS AS SHOWN – ANY REVISIONS TO THESE SPANS SHALL INCLUDE A RE-DESIGN ON STEEL REQD.

1. CONCRETE FOR STRUCTURE SHALL BE CLASS "A" 3,000 P.S.I. AT 28 DAYS.
2. ALL EXPOSED EDGES SHALL BE CHAMFERED 3⁄4".
3. REINFORCING STEEL SHALL BE NEW BILLET STEEL, INTERMEDIATE GRADE, ASTM A–15. THE DEFORMATION SHALL CONFORM TO ASTM A–305.
4. ALL DIMENSIONS RELATING TO REINFORCING STEEL ARE TO CENTER OF BARS.
5. ALL BARS INTERCEPTING MANHOLE OPENING AND REINFORCED CONCRETE PIPE SHALL BE FIELD–CUT.
6. WHERE LAPPING OF BARS IS REQUIRED, A MINIMUM LAP OF 33 DIAMETERS SHALL BE USED.
7. INVERT OF JUNCTION BOX TO BE SHAPED WITH CONCRETE FILL (2,500 P.S.I. MIN.) TO EFFECT DRAINAGE TO OUTLET PIPE. COST SUBSIDIARY TO CLASS "A" CONCRETE (JUNCTION BOXES).
8. PAYMENT FOR ALL EXCAVATION, BACKFILLING, CONCRETE, REINFORCING STEEL, VERTICAL STACK, RING AND COVER SHALL BE INCLUDED IN THE UNIT COST OF ITEM 403 – "STORM SEWER JUNCTION BOXES AND INLETS".

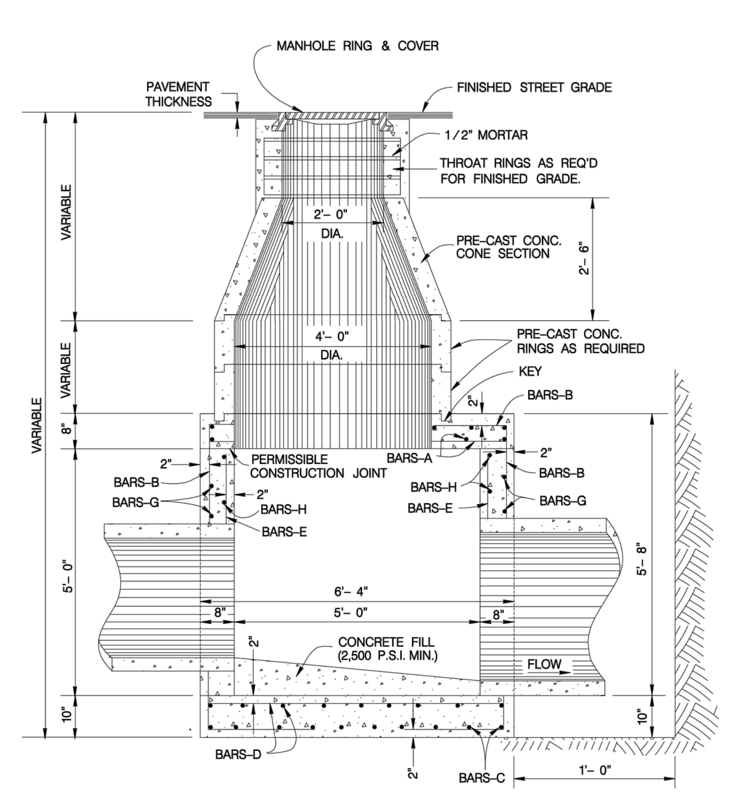

SECTION A–A

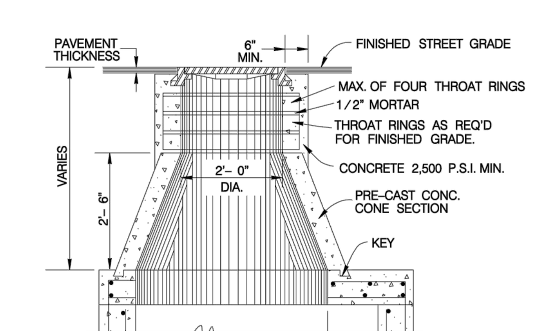

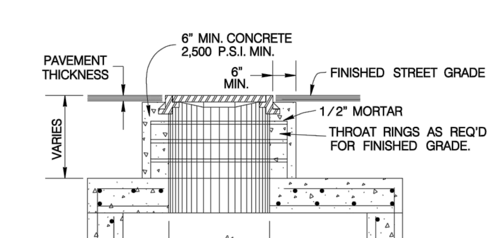

VARIATION OF VERTICAL STACK

VERTICAL STACK DESIGN SHALL BE GOVERNED BY THE DEPTH OF THE TOP OF THE JUNCTION BOX BELOW THE FINISHED STREET GRADE.

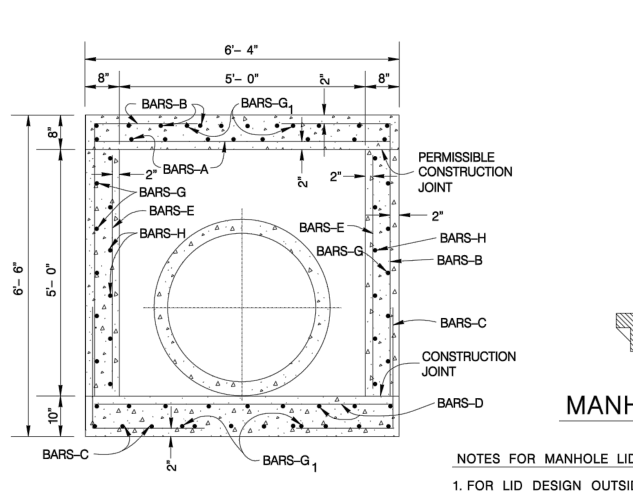

SECTION B–B

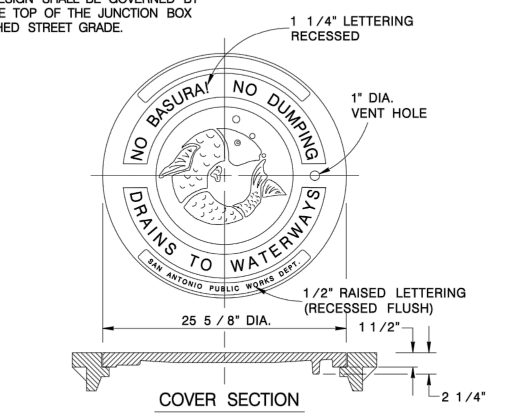

MANHOLE LID & RING DETAIL

SCALE: 1 : 16

NOTES FOR MANHOLE LID AND RING

1. FOR LID DESIGN OUTSIDE OF CITY OF SAN ANTONIO, DELETE "SAN ANTONIO PUBLIC WORKS DEPT.".
2. CASTING NUMBER AND MANUFACTURER'S I.D. ON LID AND RING.
3. LOAD BEARING CAPABILITY OF HS–20 MINIMUM.
4. THE LOAD BEARING SURFACES SHALL BE MACHINE GROUND.
5. THE COMBINED WEIGHT OF THE MANHOLE RING AND COVER MUST BE AT LEAST 260 LBS.

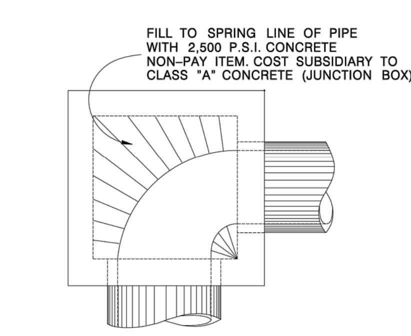

CURVED DEFLECTOR DETAIL

JANUARY 2005

CITY OF SAN ANTONIO
CAPITAL IMPROVEMENTS MANAGEMENT SERVICES DEPARTMENT

5'x5'x5' JUNCTION BOX STANDARDS

____% SUBMITTAL PROJECT NO.:________ DATE:________
DRWN. BY:________ DSGN. BY:________ CHKD. BY:________ SHEET NO.:____OF____

F-1892

SIA ENGINEERING, INC.
6977 SAN PEDRO AVE.
SAN ANTONIO, TEXAS 78216-6245
(210) 341-5500 FAX (210) 308-0662

STATE OF TEXAS
DAVID A. GALVAN
81950
REGISTERED PROFESSIONAL ENGINEER

DATE: JAN. 21, 2015
DESIGNED BY: D.A.G.
DRAWN BY: K.F.K.
CHECKED BY: D.A.G.
SCALE:
HOR.: (AS SHOWN)

DETAILS

TIMBERHILL & HUEBNER
CITY OF LEON VALLEY
BEXAR COUNTY, TEXAS

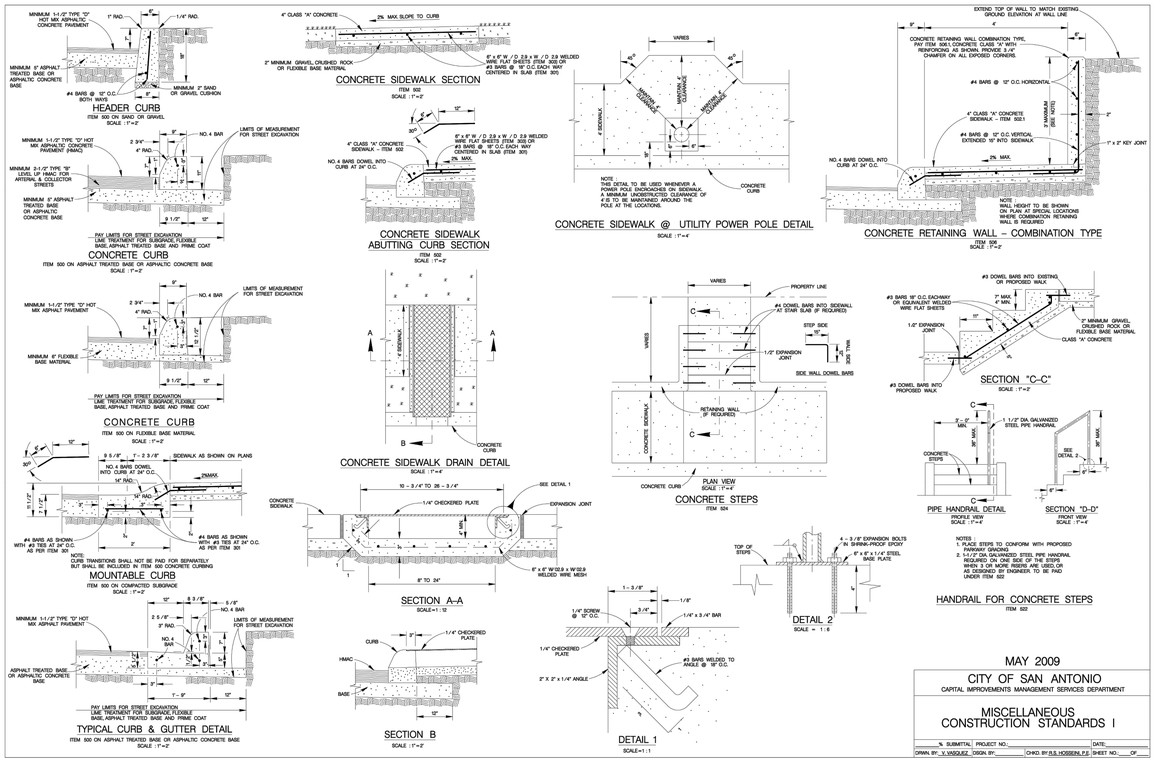

F-1892

SIA ENGINEERING, INC.
6977 SAN PEDRO AVE.
SAN ANTONIO, TEXAS 78216-6245
(210) 341-5500 FAX (210) 308-0662

STATE OF TEXAS
DAVID A. GALVAN
81950
REGISTERED PROFESSIONAL ENGINEER

DATE:	JAN. 21, 2015
DESIGNED BY:	D.A.G.
DRAWN BY:	K.F.K.
CHECKED BY:	D.A.G.
SCALE: HOR.:	(AS SHOWN)

DETAILS

TIMBERHILL & HUEBNER

CITY OF LEON VALLEY
BEXAR COUNTY, TEXAS

SHEET 8
OF 8